CITY OF CHIPPEWA FALLS, WISCONSIN

NOTICE OF PUBLIC MEETING

In accordance with the provisions of the Wisconsin State Statutes, Sec. 19.84, notice is hereby given that a public meeting of:

Committee #3
Transportation, Construction, Public Safety and Traffic

Will be held on Tuesday, July 18, 2017, at 5:30 pm in the City Hall Council Chambers, 30 W. Central Street, Chippewa Falls, WI

Items of business to be discussed or acted upon at this meeting are shown on the agenda below:

1. Discuss request from Toycen Motors for a variance from Chippewa Falls Municipal Code Chapter 19 relative to sign height/size restrictions. Possible recommendations to Council.

2. Discuss draft ordinance entitled: An Ordinance Prohibiting Temporary Encroachments in the Street Right of Way or Boulevard Portions of City Streets. Possible recommendations to Council.

3. Discuss Contract for Wisconsin Hazardous Materials Response System Services between the State of Wisconsin Department of Military Affairs and the City of Chippewa Falls. Possible recommendations to Council.

4. Adjournment

NOTICE IS HEREBY GIVEN THAT A MAJORITY OF THE CITY COUNCIL MAY BE PRESENT AT THIS MEETING TO GATHER INFORMATION ABOUT A SUBJECT OVER WHICH THEY HAVE DECISION MAKING RESPONSIBILITY.
NOTE: REASONABLE ACCOMMODATIONS FOR PARTICIPATION BY INDIVIDUALS WITH DISABILITIES WILL BE MADE UPON REQUEST. FOR ADDITIONAL INFORMATION OR TO REQUEST THIS SERVICE, CONTACT THE CITY CLERK AT 726-2719.

Please note that attachments to this agenda may not be final and are subject to change. This agenda may be amended as it is reviewed.

CERTIFICATION OF OFFICIAL NEWSPAPER
I hereby certify that a copy of this notice has been posted on the City Hall bulletin board and a copy has been given to the Chippewa Herald on June 30, 2017 at 12:4 5 pm by BNG.

Toycen Motors

You'll find a friend!

1115 Martin Road, P.O. Box 27
Bloomer, WI 54724-0027
(715) 568-2900 • 1-888-Toycen2

6/21/2017

Mr. Paul Lasiewicz

City Inspector

30 W. Central, Chippewa Falls, WI. 54729

Dear Paul,

As per our phone conversation I would like to request a variance from City Code on our Blue Oval Ford sign for our new dealership that is being constructed at 1000 Chippewa Crossing Blvd. Chippewa Falls. The sign we wish to re-locate from our Bloomer location is already owned by us, in great condition and can be moved for much less than the cost of a new sign. The sign in question is 34 feet 8.25 inches high and has a square footage of 130 feet. This is slightly larger than your limits.

I have enclosed a copy of our sight plan that shows the approximate location of the sign and I have also included a detailed drawing of the sign that also shows the specific dimensions. I would be most happy to personally answer any questions at a hearing or committee meeting. Moving this existing sign would result in substantial savings to our dealership. In addition, I think given the location and the proximity to highway 29, this size sign is most appropriate. If we had no sign to move, I would still be asking for a variance on a sign of this size.

Thank you for your time and consideration. Please contact me with any further questions you may have.

Sincerely,

Dan Toycen President

Bloomer (soon to be Toycen) Ford

2111 W. 20th Bloomer, WI. 54724

PROPOSED SIGN TO RELOCATE

FO F-130 P-28

Remove, permit, and relocate the dealer's Ford Oval brand sign to the new dealership location in Chippewa Falls.
Sign to be re-installed "AS IS" with new anchor bolts and foundation per Ford specs.
Dealer is responsible for providing electrical to the sign per Ford specs.

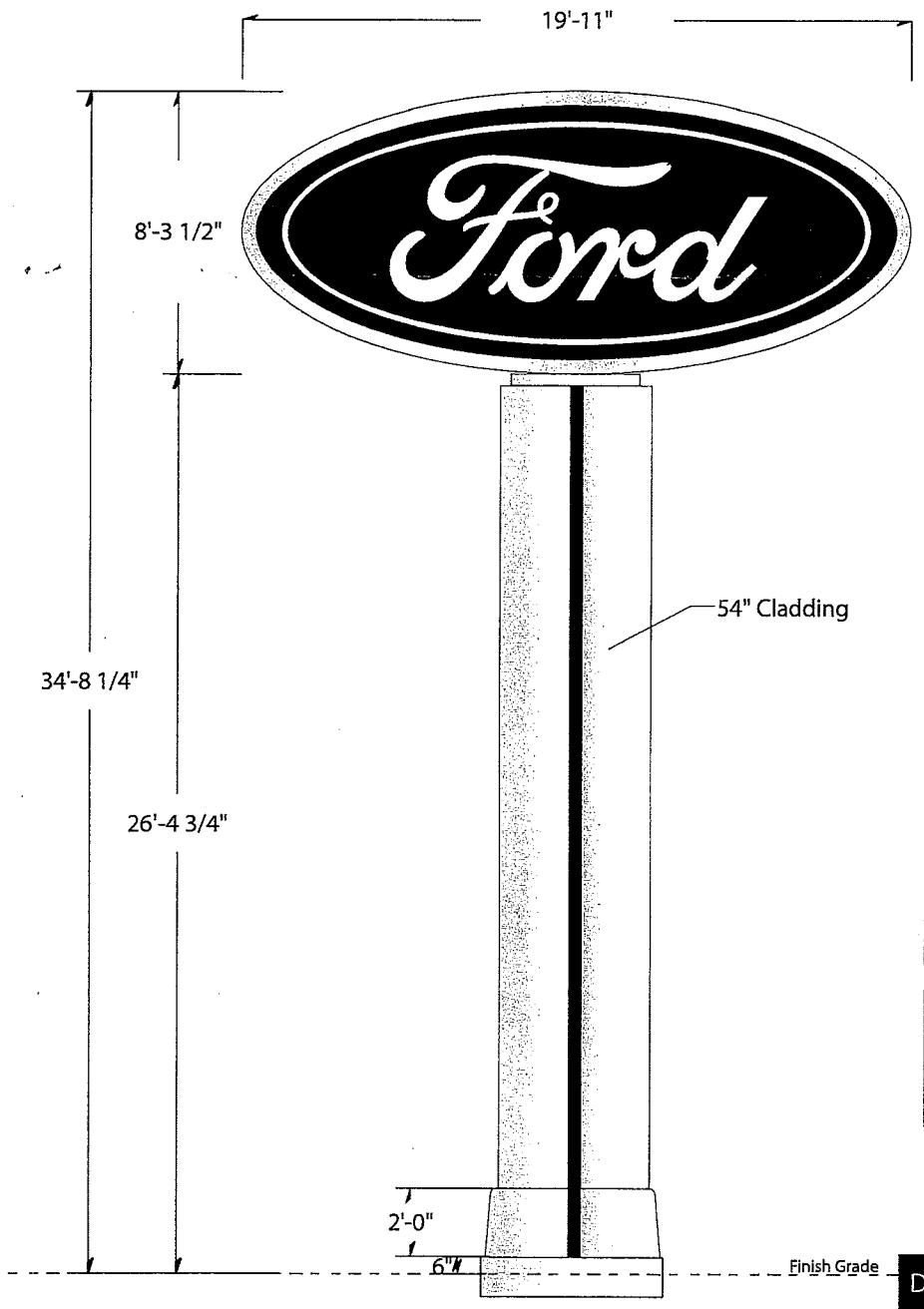

ELECTRICAL REQUIREMENTS:

* Sign requires two (2) dedicated 120 volt, 20-amp circuits.
* Conduit & wire size based on NEC guidelines or other local requirements.

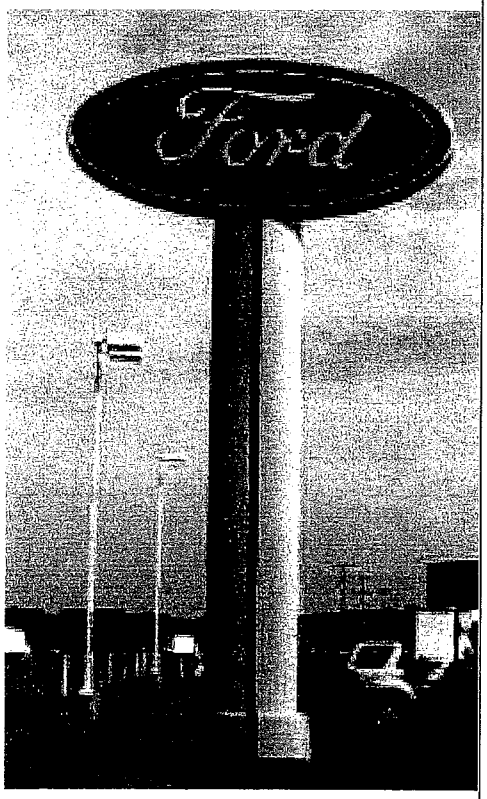

Dealer signature	
Date	5/24/17

NOTE: Overall height is approximate as shown.

LINCOLN

This document is the sole property of Architectural Graphics, Inc., and all design, manufacturing, reproduction, use and sale rights regarding the same are expressly forbidden. It is submitted under a confidential relationship, for a special purpose, and the recipient, by accepting this document will not be copied or reproduced in whole or in part, nor its contents revealed in any manner or to any person except for the purpose for which it was tendered, nor any special features peculiar to this design be incorporated in other projects.

Title: FO F-130 P28	Customer: Ford
Date: 9/11/12	Drawn by: M. McCaslin
Customer Rep: N/A	Scale: 3/16"=1'

Architectural Graphics, Inc.
2655 International Pkwy., Virginia Beach, VA 23452
PHONE: (757) 427-1900 - Fax (757) 430-1297
www.AGISign.com

PROPOSED SIGN LOCATION

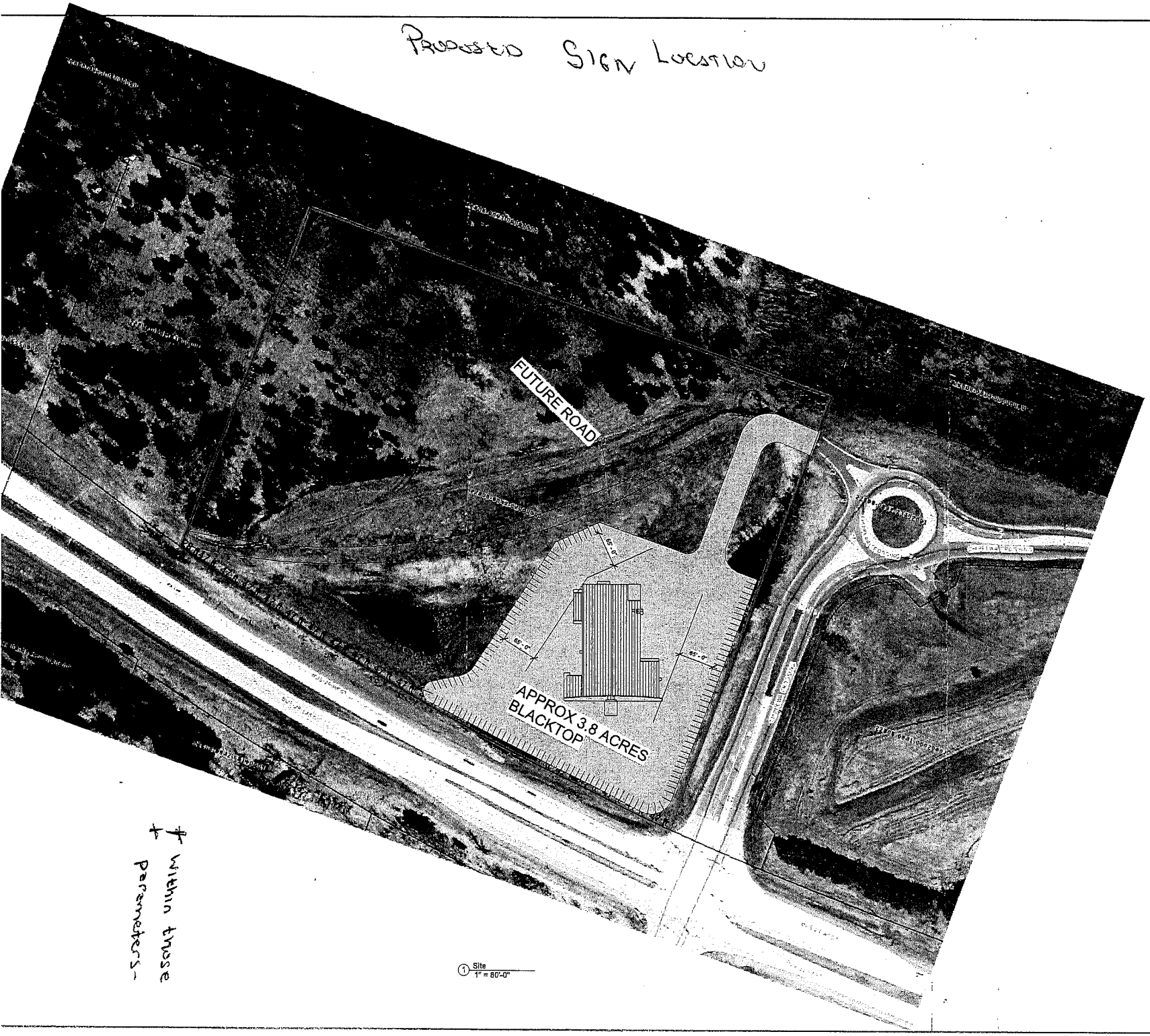

1 Site
1" = 80'-0"

+ within those
+ parameters-

NO	DATE:	COMMENTS:	DRAWN BY:
1	1/13/17	ORIGINAL DRAWING VERSION	JAKE
2	02/02/17	ADDED DETAIL TO ALL DRAWINGS	JAKE
3	03/08/17	MOVED CARWASH AND DETAIL AREA	JAKE
4	03/24/17	MOVED DETAIL AREA TO OPPOSITE SIDE OF SHOP	JAKE
5	04/05/17	UPDATED DRAWINGS	JAKE
6	04/28/17	ADDED FINAL DETAILS AND SECTIONS	JAKE

BAUMAN CONSTRUCTION
OF CHIPPEWA FALLS, INC.
3844 130th St, Chippewa Falls, WI 54729
Phone: 715-723-0307 Fax: 715-723-8466
Email: wall@baumanconstruction.net
Specialists in all types of Design
Built Commercial, Industrial, and
Multi-Purpose Buildings

BAUMAN
CONSTRUCTION OF CHIPPEWA FALLS, INC.
YOUR VISION...OUR GOAL
WWW.BAUMANCONSTRUCTION.NET

TOYCEN FORD CHIPPEWA

PROJECT #:1628502 | PROJECT MANAGER: SAI

DATE: 10/11/2016 | LOCATION: CHIPPEWA, WI

SHEET NO.

A101

ORDINANCE NO. 2017-12

AN ORDINANCE PROHIBITING TEMPORARY ENCROACHMENTS IN THE STREET RIGHT OF WAY OR BOULEVARD PORTIONS OF CITY STREETS

THE COMMON COUNCIL OF THE CITY OF CHIPPEWA FALLS, WISCONSIN, DO ORDAIN AS FOLLOWS:

1. That §§ 8.10(1) and 8.10(2)(d) of the Chippewa Falls Municipal Code which presently provide as follows:

8.10 OBSTRUCTIONS AND ENCROACHMENTS.

(1) PROHIBITED. No person shall encroach upon, move a building upon or in any way obstruct or encumber any street, alley, sidewalk, public grounds or land dedicated to public use or any part thereof or permit such encroachment or encumbrance to be placed or remain on any public way adjoining the premises of which he is the owner or occupant, except as provided in sub. (2). It shall be a violation of this section for the owner of any premises to permit trees or shrubs to grow over any street, sidewalk or sidewalk area so as to encroach upon or interfere with the use of the street or sidewalk or interfere with the safe lighting thereof.

(2) EXCEPTIONS. The prohibition of sub. (1) shall not apply to the following:

•••

(d) Temporary encroachments or obstruction authorized by permit under sub. (3).

•••

be amended to include the sentence set forth at the end of each subsection as set forth in the following amendment:

8.10 OBSTRUCTIONS AND ENCROACHMENTS.

(1) PROHIBITED. No person shall encroach upon, move a building upon or in any way obstruct or encumber any street, alley, sidewalk, public grounds or land dedicated to public use or any part thereof or permit such encroachment or encumbrance to be placed or remain on any public way adjoining the premises of which he is the owner or occupant, except as provided in sub. (2). It shall be a violation of this section for the owner of any premises to permit trees or shrubs to grow over any street, sidewalk or sidewalk area so as to encroach upon or interfere with the use of the street or sidewalk or interfere with the safe lighting thereof. A temporary encroachment(s) for which a Street Privilege Permit under sub. (3) or for which a Street Use Permit under sub. (5) has not been granted or not otherwise excepted herein is subject to the provisions of Ordinance 8.105.

(2) EXCEPTIONS. The prohibition of sub. (1) shall not apply to the following:

•••

(d) Temporary encroachments or obstruction authorized by permit under sub. (3). A temporary encroachment(s) for which a Street Privilege Permit under sub. (3) or for which a Street Use Permit under sub. (5) has not been granted or not otherwise excepted herein is subject to the provisions of Ordinance 8.105.

●●●

2. That § 8.105 of the Chippewa Falls Municipal Code be created to provide as follows:

8.105 <u>ENCROACHMENTS IN STREET RIGHT OF WAY OR BOULEVARD.</u>

(1) PURPOSE. The City of Chippewa Falls Street Department has duties to perform which are hampered, delayed, and sometimes not performed due to temporary encroachments in the boulevard portions of streets and in the street right of way areas.

(2) AREA DEFINITION. Recognizing that the terms "street right of way" and "boulevard" can have varying meanings to residents and others for the purposes of this § 8.105 the following definitions apply. The terms "street right of way" or "boulevard" are herein defined to mean:

(a) Where a sidewalk exists the area is defined as the sidewalk itself and the area between the sidewalk and the paved portion of the street.

(b) Where a sidewalk does not exist the area is defined as all of an area 14 feet perpendicular from the edge of the paved portion of the street.

(3) PROHIBITION. No person shall place into the street right of way or boulevard as defined above any personal property. This includes, but is not limited to, vehicles, signs of any nature, furniture, appliances, toys, and household items.

(4) EXCEPTIONS. The prohibition in sub. (3) shall not apply to any of the following:

(a) Garbage and recycling left for pick-up but not for more than 24 hours.

(b) Any personal property subject to a Street Privilege Permit under § 8.10(3).

(c) Any personal property subject to a Street Use Permit under § 8.10(5).

(d) Any personal property otherwise excepted under § 8.10 or any other provisions of this Code.

(5) NO ENLARGEMENT OF RIGHTS. In some areas the street right of way is non-standard and may extend beyond the area described in sub. (2). Nothing herein shall be construed as reducing any street right of way belonging to the City of Chippewa Falls which extends beyond the area described in sub. (2) and a property owner's rights therein are not hereby enlarged.

(6) PENALTIES. Any person violating this section shall be subject to a forfeiture of not less than $25.00 and not more than $200.00 for each offense together with all applicable court costs and fees which are assessable. Each calendar day shall be deemed a new offense.

Dated this 18th day of July, 2017.

ALDERPERSON: _____

FIRST READING: June 20, 2017

SECOND READING: July 18, 2017

APPROVED: _____
Gregory S. Hoffman, Mayor

ATTEST: _____
Bridget Givens, City Clerk

STATE OF WISCONSIN

DEPARTMENT OF MILITARY AFFAIRS

DIVISION OF EMERGENCY MANAGEMENT

Brian M. Satula
Administrator

Scott Walker
Governor

June 22, 2017

Chief Michael Hepfler
Chippewa Falls Fire Department
1301 Chippewa Crossing Blvd.
Chippewa Falls, WI 54729

Re: Contract for Wisconsin Hazardous Materials Response System Services

Dear Chief Hepfler:

Enclosed please find three executed originals of the Contract for Wisconsin Hazardous Materials Response System Services for the period covering July 1, 2017 through June 30, 2019.

I have also enclosed an additional set of signature pages that will allow me to assemble a master original of the contract with all original signature pages. I will provide you with copies of all signatures pages from the other contract partners when they are all received.

Once executed by your local officials, kindly return one original contract and the additional set of signature pages to me in the enclosed envelope. You may retain the additional contracts for your municipal file.

Thank you for your professional courtesy in this regard.

Sincerely,

Randi Wind Milsap

Randi Wind Milsap
General Counsel

Cc: Brian M. Satula, WEM Administrator
Maj Gen Donald P. Dunbar, The Adjutant General

CONTRACT FOR
WISCONSIN HAZARDOUS MATERIALS RESPONSE SYSTEM SERVICES

JULY 1, 2017 THROUGH JUNE 30, 2019

Between

STATE OF WISCONSIN
DEPARTMENT OF MILITARY AFFAIRS
DIVISION OF EMERGENCY MANAGEMENT

And

CITY OF EAU CLAIRE, WISCONSIN
CITY OF CHIPPEWA FALLS, WISCONSIN
CITY OF SUPERIOR, WISCONSIN
CITY OF ASHLAND, WISCONSIN
CITY OF RICE LAKE, WISCONSIN
CITY OF MENOMONIE, WISCONSIN
ALSO COLLECTIVELY REFERRED TO AS THE
NORTHWEST WISCONSIN HAZARDOUS MATERIALS TASKFORCE

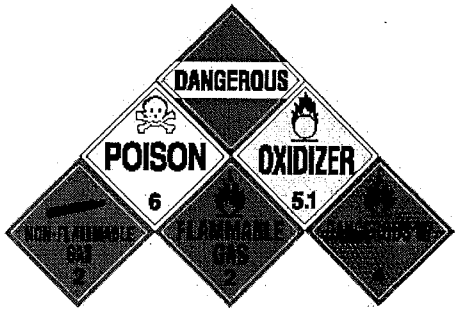

DATE: June 30, 2017

CONTRACT FOR WISCONSIN HAZARDOUS MATERIALS RESPONSE SYSTEM SERVICES

1.0 General Contract Information

1.1 **Parties:** This contract is between the State of Wisconsin, Department of Military Affairs, Division of Emergency Management (hereinafter "Division") and the City of Eau Claire, the City of Chippewa Falls, the City of Superior, the City of Ashland, the City of Rice Lake, and the City of Menomonie, Wisconsin also collectively referred to as the Northwest Wisconsin Hazardous Materials Taskforce (hereinafter "Contractor") for the provision of Wisconsin Hazardous Materials Response System services as described herein and authorized under 1991 Wisconsin Act 104, as codified in §323.70 of the Wisconsin Statutes and as further amended.

1.2 **Recitals:** WHEREAS, in order to protect life and property against the dangers of emergencies involving Level A releases, the Division may assign and make available for use in any county, city, village, or town, a hazardous materials response system.

WHEREAS, the Division desires to enter into this Agreement to establish Contractor as part of the Wisconsin Hazardous Materials Response System, and Contractor desires to be so designated and to enter into this Agreement.

HOWEVER, the parties expressly recognize and attest by this Agreement that neither party intends to create or to assume fiduciary responsibilities to provide for the containment, cleanup, repair, restoration and investigation of the environment (air, land and water) in a Hazardous Substance Incident, which named responsibilities are and shall remain the sole obligations of the Wisconsin Department of Natural Resources under §§292.11 and 323.60(4), Wis. Stats.

1.3 **Contract Term:** This Agreement shall continue for two years commencing July 1, 2017 through June 30, 2019.

2.0 Definitions

2.1 **Definitions:** The following definitions are used throughout this Agreement:

Agreement means this Contract, together with the Exhibits. Exhibits include the following:

Exhibit A	Standard Terms and Conditions (Request for Bids/Proposals) DOA-3054 Form

Exhibit B	Northwest Wisconsin Hazardous Materials Taskforce Budget
Exhibit C	Map of Wisconsin Hazardous Materials Response System
Exhibit D	Certificate of Protection in Lieu of an Insurance Policy, as applicable.

State means the State of Wisconsin.
Department means the State of Wisconsin, Department of Military Affairs.
Division means the Division of Emergency Management.
Contractor means the City of Eau Claire, the City of Chippewa Falls, the City of Superior, the City of Ashland, the City of Rice Lake, and the City of Menomonie, Wisconsin also collectively referred to as the Northwest Wisconsin Hazardous Materials Taskforce by which hazardous materials response service or services to Level A releases will be performed under this Agreement. Under §323.70(2), Stats., the Division may only contract with a local agency.
Emergency means a situation which presents an imminent risk to public health, safety and/or the environment.
Hazardous Materials Response System Taskforce means one of four (4) Taskforces located throughout the State and comprised of Type I, Type II, and Type III hazardous materials teams.
Incident means any actual or imminent threat of release, rupture, fire or accident that results, or has the potential to result, in the loss or escape of a hazardous material into the environment.
Level A Release means a release that meets the specifications under §323.02(11) of the Wisconsin Statutes.
Level B Release means a release that meets the specifications under §323.02(12) of the Wisconsin Statutes.
Local Agency means an agency of a county, city, village, or town, including a municipal fire department.
Responsible Party means any person, as defined in s. 299.01 (10), Stats., or 42 USC 9607(a), who is responsible for the emergency involving a release or potential release of a hazardous substance under s. 323.70 (4) or 323.71 (4), Stats., or a person who is found to have abandoned containers, as defined under s. 292.41 (1), Stats., that are releasing or discharging a hazardous substance to which a response team was called to respond.
Type I Hazardous Materials Team includes all Type II and Type III Level A release response capabilities, plus the self-sufficient ability to make entry to and the capability to respond to Weapons of Mass Destruction (WMD) and Chemical, Biological, Radiological, Nuclear, and Explosive (CBRNE) incidents.
Type II Hazardous Materials Team includes all Type III Level A release response capabilities plus the analysis of unknown substances and the capability to make entry to an unknown substance response with the proper number of personnel.
Type III Hazardous Materials Team includes response capabilities to all known chemicals and fuels plus the ability to perform mitigation operations and the capability to make entry for Level A releases and known substances with the proper number of personnel.

Wisconsin Hazardous Materials Response System means the four (4) tiered hazardous materials response Taskforces comprised of fire departments chosen by the Division to provide Level A hazardous materials response that meets the standards under 29 CFR 1910.120 and/or 29 CFR 1910.134(f), NFPA 472 and 1582, IS 700, ICS 100, 200, 300 and 400, and Wisconsin Firefighter 1.

3.0 Statement of Work

3.1 **Services to be provided by Contractor:** During the term of this Agreement, the Contractor agrees to provide hazardous materials response system services to Level A releases through the use of designated Type I, Type II, and Type III Hazardous Materials Teams making up four (4) Taskforce areas throughout the State of Wisconsin as described in Exhibit C, attached hereto and incorporated by reference herein. This Agreement does not include response to Type IV incidents which are locally-defined and handled by the authority having jurisdiction.

Contractor's response activities under this Agreement shall be limited to emergency operations, reporting and documentation of activities arising from hazardous materials releases/incidents which threaten life, property and/or the environment. Contractor shall not provide under this Agreement any services with respect to the sampling, testing, analysis, treatment, removal, remediation, recovery, packaging, monitoring, transportation, movement of hazardous materials, cleanup, storage and disposal of hazardous materials except as these may be reasonably necessary and incidental to preventing a release or threat of release of a hazardous material or in stabilizing the emergency response incident, as determined by the Contractor.

Contractor shall establish safety perimeters at or near sites and vessels. Contractor shall not be required to locate underground utilities, insure appropriate traffic control services, conduct hydrological investigations and analysis, or provide testing, removal and disposal of underground storage tanks at or near the emergency response incident to which the Contractor is dispatched.

The Division and Contractor make no representations to third parties with regard to the ultimate outcome of the hazardous materials services to be provided, but Contractor shall respond to the best of its abilities, subject to the terms of this Agreement.

3.2 **Performance Conditions:** Contractor acknowledges that prior to undertaking any emergency response activity under this Agreement, Contractor shall receive written approval from the Division to proceed with response activities. A Contractor that has previously been providing services under a Regional hazardous Materials Contract with the Division is considered to have received written approval to proceed with response activities. Division approval shall be conditioned upon the Contractor demonstrating to the Division that its employees, equipment, and

vehicles meet or exceed applicable regulatory requirements.

3.3 **Personnel:** Contractor shall provide an adequate number of trained, medically monitored, competent, and supervised personnel as established by the Division and as is reasonably necessary to operate within the safety levels of the Wisconsin Hazardous Materials Response System. Contractor shall meet the standards under 29 CFR 1910.120 and/or 29 CFR 1910.134(f), NFPA 472 and 1582, IS 700, ICS 100, 200, 300 and 400, and Wisconsin Firefighter 1.

3.4 **Vehicles and Equipment:** Contractor shall limit its activities to that which can be safely accomplished within the technical limitations of the available vehicles and equipment. Contractor may use equipment and vehicles provided by the Division for Contractor's local use, however, Contractor agrees that in the event of multiple responses, said equipment which is already not committed to a prior response shall be used on a priority basis to respond to a hazardous materials release. Contractor shall provide the Division with a current listing of its equipment assets including the manufacturer, date of purchase, and calibration requirements.

3.5 **Vehicle and Equipment Use Limitations:** This Agreement in no way limits the Contractor from responding with Division-provided vehicles, equipment, and supplies under local authority, mutual-aid agreements, or other contracts under local authority.

3.6 **Response Procedures and Limitations:** Contractor recognizes that its obligations under this Agreement are paramount to the State of Wisconsin. Contractor agrees that if local fire response obligations in Contractor's own jurisdiction create limits or unavailable resources, Contractor will seek aid from local jurisdictions to assist in local fire response obligations in Contractor's own jurisdiction.

Contractor's obligation to provide services hereunder shall arise, with respect to specific response actions, upon receipt of an emergency response request pursuant to mutually approved Standard Operating Guidelines provided in Subsection 3.8 herein. These guidelines will be maintained in a mutual aid support system that will be used to assess readiness.

3.7 **Right of Refusal:** If, on occasion, a response under this Agreement would temporarily place a verifiable undue burden on the Contractor because Contractor's resources are otherwise inadequate or unavailable and mutual aid is unavailable for a hazardous materials response within the State, then if notice has been provided to the Division, the Contractor may decline a request for hazardous material response system services.

3.8 **Standard Operating Guidelines:** Contractor and Division agree that hazardous materials response system operations will be conducted in accordance with

Wisconsin Hazardous Materials Response System Operations Plan, and "Call Out Procedure" that will be mutually approved by the parties to this Agreement.

3.9 **Mutual Aid Box Alarm System (MABAS):** Contractor is highly encouraged to participate in the MABAS-WI program. At a minimum and absent MABAS-WI participation, Contractor will be qualified and credentialed under all NIMS standards for hazardous materials.

3.10 Standardized Equipment Reports: In order to prepare, plan, and respond to the dangers of emergencies involving Level A releases, the Division shall require standardized equipment purchases and inventory for the Wisconsin Hazardous Materials Response System. Contractor shall provide the Division, on a quarterly basis, with a current listing of all hazardous materials equipment assets including but not limited to the manufacturer, date of purchase, and calibration requirements on an electronic spreadsheet developed by the Division. The Division will input Contractor's equipment inventory list including vendor information on the Division's secure WebEOC website located at wi.webeocasp.com, or equivalent. The quarterly Standardized Equipment Reports shall be provided to the Division no later than thirty (30) days after the end of each quarter. Failure to submit timely Standardized Equipment Reports may result in the withholding of quarterly payments under this Agreement.

3.11 Operating Expenditure Reports: In order to prepare, plan, and respond to the dangers of emergencies involving Level A releases, the Division shall collect standardized operating expenditure information from Contractor including but not limited to wages and stipend costs. Contractor shall provide the Division, on a biannual basis, with a current listing of its hazardous materials team operating expenditures on an electronic spreadsheet developed by the Division. The Division will input Contractor's operating expenditures on the Division's secure WebEOC website located at wi.webeocasp.com, or equivalent. The quarterly Operating Expenditure Reports shall be provided to the Division no later than thirty (30) days after the end of each reporting period. Failure to submit timely Operating Expenditure Reports may result in the withholding of quarterly payments under this Agreement

3.12 Hazardous Materials Assist and Response Quarterly Reports: In order to prepare, plan, and respond to the dangers of emergencies involving Level A releases, the Division shall collect accurate, actual, and standardized hazardous materials assist and response data. Further, Contractor shall continue to provide the Division, on a quarterly basis, with a current listing of all hazardous materials assist and response data. The Division will input Contractor's assists and response data on the Division's secure WebEOC website located at wi.webeocasp.com, or equivalent. The quarterly Hazardous Material Assist and Response Reports shall be provided to the Division no later than thirty (30) days after the end of each quarter. Failure to submit timely Hazardous Material Assist

and Response Reports may result in the withholding of quarterly payments under this Agreement.

3.13 Wisconsin Hazardous Material Response System Member Rosters: Under Subsection 4.12 herein, members of the Wisconsin Hazardous Materials Response System are considered state employees for Worker's Compensation purposes. It is paramount that the Division has a current listing of all members in order to assure coverage. Contractor shall provide the Division, on a quarterly basis, with a current listing of its members on an electronic spreadsheet developed by the Division. Failure to submit timely Member Rosters may result in the withholding of quarterly payments under this Agreement.

4.0 Contractor Annual Allocation, Reimbursement, and Grants

There are two types of Contractor funding under this Agreement: (1) Annual Allocation based on the Type I, Type II or Type III Level A release capabilities provided by designated Contractor and (2) Team Response Costs. Each of these is discussed more fully below.

4.1 **Annual Allocation and Quarterly Payments:** As provided under §323.70(2) of the Wisconsin Statutes, Contractor will be subsidized annually, commencing 7/1/2017 and for State Fiscal Years 2017/18 through 2018/19, under this Agreement for its approved Annual Allocation as described in "Exhibit B", attached hereto and incorporated by reference herein. The payments shall be made to Contractor on a quarterly basis. Funding amounts will be based by Type I, Type II, and Type III Hazardous Materials Team designation. The Annual Allocation is intended to covers costs for the proper number of trained personnel per shift depending on the type of response, a stipend per response system member as well as baseline, maintenance, and exit physicals for each response system member. Said Quarterly Annual Allocation payments to Contractor shall be made from the appropriation account under §20.465(3)(dd) of the Wisconsin Statutes.

4.2 **Annual Allocation Expenditures:** It is the intent of the Division that funds allocated under Subsection 4.1 of this Agreement shall supplement existing, budgeted monies of the Contractor to provide the services specified herein and may not be used to replace, decrease or release for alternative purposes the existing, budgeted monies of or provided to the Contractor.

Further, the Division intends that funds allocated under Subsection 4.1 of this Agreement shall not be used by the local agency to supplement, offset, replace, decrease or release any budgetary obligations for other municipal departments not directly connected or attached to Contractor.

4.3 **Team Response Costs and Reimbursement:** Pursuant to §323.70(3) of the Wisconsin Statutes, Contractor shall be reimbursed for reasonable and necessary

team response costs incurred in responding to a Level A release under this Agreement. Such team response costs may include, but are not limited to:

(1) Reimbursement for use of Vehicle(s) and Apparatus: Contractor shall be reimbursed for the approved use of its vehicles and equipment at FEMA-established rates.

(2) Personnel Expenses: Contractor's team response personnel expenses which are approved and authorized under this Agreement are reimbursable at the rates described as follows:

a) For full-time fire departments, at the actual cost of personnel expenses.

b) For part-time and volunteer fire departments or team personnel, at the average over-time hourly rates for the three geographically-nearest full-time fire departments.

Team response personnel expenses shall be billed to the nearest one-fourth (1/4) hour work period. Personnel expenses may reflect replacement personnel costs and indirect charges/costs for wage, fringe, death and duty disability retirement benefits.

(3) Emergency Expenses: Contractor's necessary and reasonable emergency expenses related to services rendered under this Agreement are reimbursable. All such expenses must be based on actual expenditures and fully documented by the Contractor. The Division reserves the right to deny any reimbursement of unjustifiable Contractor expenditures.

Pursuant to §323.70(3) Wis. Stats., Contractor shall be reimbursed by the Division for its necessary and reasonable emergency response costs and expenses related to services rendered under this Agreement.

Such reimbursable team response costs shall be limited to amounts collected by the Division pursuant to §323.70(4), Wis. Stats. and, under certain conditions, pursuant to the amounts appropriated under §20.465(3)(dr), Stats. Contractor shall be reimbursed by the Division in accordance with Subsections 4.5 and 4.6 herein.

4.4 **Training Costs:** In addition to the Annual Allocation, funding may be available to Contractor through the Division's training and equipment grants. Applications shall be made via "E-Grant" and will be available to Contractor based upon need. The Division makes no representations that funding will be available to all parties.

4.5 **Standard Equipment Purchases and Cache:** It is the intent of the Division to standardize equipment purchases for the Wisconsin Hazardous Materials

Response System. Contractor shall provide the Division with a current listing of its equipment assets including the manufacturer, date of purchase, and calibration requirements. The Division will develop a standardized equipment list including vendor information.

Contractor may make equipment purchase requests to the Division by submitting an "E-Grant" request with supporting documentation. The Division makes no representations that funding will be available to all parties.

It is the intent of the Division to develop and maintain an equipment cache. When developed, Contractor may borrow specific equipment from the equipment cache in the event of an equipment failure requiring repair of Contractor's equipment.

4.6 **Direct Collection of Team Response Costs by Contractor:** In addition to Division reimbursement addressed in Subsections 4.2 herein, Contractor may elect to collect team response costs directly from the Responsible Party(s) and/or seek reimbursement for local agency response pursuant to §323.71 of the Wisconsin Statutes.

4.7 **Where No Responsible Party Can Be Identified or the Responsible Party is Unable to Pay Team Response Costs:** As previously mentioned in Subsection 4.3 and upon the election of Contractor, the Division shall bill the party(s) responsible for causing the hazardous materials emergency for total emergency response costs. Where there is no identifiable Responsible Party, or if the Responsible Party is unable to pay, the Division agrees to reimburse Contractor's Team response costs from the emergency response supplement created under §20.465(3)(dr), Stats., only if the hazardous materials response team has made a good faith effort to identify the person responsible under §323.70(3), Stats., and that person cannot be identified, or, if that person is identified, the team has received reimbursement from that person to the extent that the person is financially able or has determined that the person does not have adequate money or other resources to reimburse the hazardous material response team. To seek Division reimbursement from the emergency response supplement created under §20.465(3)(dr), Stats., Contractor must comply with all Division-approved reimbursement procedures and/or duly enacted Administrative Rule(s) as well as the billing system requirements provided under Subsection 4.9 herein.

4.8 **Minimum Contract Subsidy:** This Agreement shall have a minimum contract Annual Allocation for State Fiscal Years 2017/18 through 2018/19 as described in "Exhibit B" to this Agreement. The Division certifies that sufficient funds are available and authorized within the Division's current appropriation or limitation. The minimum contract Annual Allocation does not, however, include Contractor's team response costs as specified in Subsection 4.3 of this Agreement.

No additional Contractor subsidy or reimbursement shall be paid or any additional

demands placed on Contractor under this Agreement unless otherwise specifically agreed to by the Division and the Contractor, and upon written amendment to this Agreement. The Division's reimbursement(s) shall be full payment for work performed or services rendered and for all labor, materials, supplies, equipment, and incidentals necessary to complete the work authorized under this Agreement. Acceptance of payment by the Contractor shall operate as a release of the Division of all claims by Contractor for reimbursement of team response costs except where partial payment has been made due to limitations of the Division funds under §323.70(3), the amounts appropriated under §20.465(3)(dr) and subject to further payment as set forth above.

4.9 **Billing System for Division Reimbursement of Team Response Costs:** Contractor will provide an estimate of team response costs to the Division within ten (10) working days of the response. If the Contractor seeks Division reimbursement under §323.70(3), or from the emergency response supplement created under §20.465(3)(dr), Wis. Stats., Contractor shall file a Notice of Intent with the Division for response costs within thirty (30) days of the response. The Division will not bill responsible parties or reimburse Contractor from the emergency response supplement created under §20.465(3)(dr), Stats., unless it receives an invoice from the Contractor. Contractor's claim for reimbursement shall contain such documentation as is necessary to support the Division's cost-recovery operations and financial audits. The Division agrees to bill responsible parties for team response costs and may bill for the total emergency response costs. Team response costs include such items as vehicle and equipment use, expendables and personnel costs. In addition, team administrative costs may be billed as part of the emergency costs.

The Division shall bill identified Responsible Party(s) within thirty (30) days of receipt of Contractor's invoice. Contractor's team response costs shall be collected by the Division from the Responsible Party(s) before payment is made to the Contractor. Thereafter, if the Division successfully recovers payment from the Responsible Party(s) it shall first be used to pay the Contractor's team response costs, if these have not been paid in their entirety, then applied to the Division's administrative costs. Any remaining funds will be used to pay emergency response costs as billed. Contractor agrees to cooperate with the Division as is reasonable and necessary in order to allow the Division to bill third parties and pursue cost recovery actions.

If a disputed billing is resolved in favor of the responsible party(s), then the Contractor shall not be required to reimburse the Division for payments previously made.

Where there is no identifiable Responsible Party, or if the Responsible party is unable to pay, the Division agrees to reimburse the Contractor's team response costs from the emergency response supplement created under §20.465(3)(dr),

Stats., within thirty (30) days of receipt of Contractor's invoice and complete documentation. Contractor's claim for reimbursement from the emergency response supplement created under §20.465(3)(dr), Stats., shall contain such documentation as is necessary to support the Contractor's good faith effort to identify the Responsible party or to collect response costs from a Responsible Party(s) that is unable to pay. Further, Contractor shall comply with all Division-approved reimbursement procedures and/or duly enacted Administrative Rule(s).

4.10 **Approval:** Contractor, when acting under this Agreement, may not respond without following the Division-approved "Call Out Procedure". Granting of response approval by the Division of Emergency Management's Duty Officer constitutes the Division's agreement to pay Contractor's team response costs under §323.70(3), Wis. Stats. Contractor agrees to make reasonable and good faith efforts to minimize Responsible Party and/or Division expenses.

4.11 **Retirement System Status and Tax Payments:** Contractor and its employees are not entitled under this Agreement to Division contribution for any Public Employees Retirement Withholding System benefit(s). Contractor shall be responsible for payment/withholding of any applicable federal, Social Security and State taxes.

4.12 **Worker's Compensation:** A member of the Wisconsin Hazardous Materials Response System who is acting under the scope of this Agreement is an employee of the State for purposes of Worker's Compensation under §323.70(5) of the Wisconsin Statutes.

4.13 **Payment of Contractor's Obligations:** Contractor agrees to make payment promptly, as just, due and payable to all persons furnishing services, equipment or supplies to Contractor. If Contractor fails, neglects or refuses to pay any such claims as they become due and for which the Division may be held liable, the proper officer(s) representing the Division, after ascertaining that the claims are just, due and payable, may, but shall not be required to, pay the claim and charge the amount of the payment against funds due Contractor under this Agreement. The payment of claims in this manner shall not relieve Contractor of any duty with respect to any unpaid claims.

4.14 **Dual Payment:** Contractor shall not be compensated for work performed under this Agreement by any state agency or person(s) responsible for causing a hazardous materials emergency except as approved and authorized under this Agreement.

5.0 Liability and Indemnity

5.1 **Scope:** During operations authorized by this Agreement, Contractor and members of the Wisconsin Hazardous Materials Response System shall be

agents of the State and protected and defended against tort liability under §323.41, Wis. Stats. For purposes of §895.46(1), Stats., members of the Wisconsin Hazardous Materials Response System shall during authorized operations be considered agents of the State and the State will indemnify Contractor as required under §895.46(1), Stats. For purposes of this section, operations means activities, including travel, directly related to a particular emergency response involving a hazardous material response/incident by a hazardous materials response system team. Operations also include specialized training activities provided under this Agreement to the members of a hazardous materials response system team, but does not include travel to and from the training.

5.2 **Civil liability exemption; hazardous material and local emergency response team:** Under §895.483 Wis. Stats., 1) a hazardous material emergency response team, a member of such a team, and a local agency, as defined in §323.70(1)(b), that contracts with the Division for the provision of a hazardous material response team, are immune from civil liability for acts or omissions related to carrying out responsibilities under a contract under §323.70(2); 2) a local emergency response team, a member of such a team, and the county, city, village or town that contracts to provide the emergency response team to the county, are immune from civil liability for acts or omissions related to carrying out responsibilities pursuant to a designation under §323.61(2m)(e); and, 3) a local emergency planning committee created under §59.07(146)(a)1, Stats., that receives a grant under §323.61 is immune from civil liability for acts and omissions related to carrying out its responsibilities under §323.61.

5.3 **Statutory Civil Immunity:** §895.4802 of the Wisconsin Statutes provides that a person is immune from civil liability for good faith acts or omissions related to assistance or advice which the person provides relating to an emergency or a potential emergency regarding either of the following:

(1) Mitigating or attempting to mitigate the effects of an actual or threatened discharge of a hazardous substance.

(2) Preventing or cleaning up or attempting to prevent or clean up an actual or threatened discharge of a hazardous substance.

(3) Any hazardous substance predictor or any person who provides the technology to enable hazardous substance predictions to be made is immune from civil liability for his or her good faith acts or omissions in making that prediction or providing that technology.

The good faith of any hazardous substance predictor or any person who provides the technology to make a prediction is presumed in any civil action. Any person who asserts that the acts or omissions under subdivision three (3) above were not

made in good faith has the burden of proving that assertion by clear and convincing evidence.

Under §895.4802(3)(c) of the Wisconsin Statutes, statutory civil immunity **does not** extend to acts or omissions which constitute gross negligence, or involves reckless, wanton or intentional misconduct. This is not intended to modify any right or duty under §895.4802, Stats.

Additional terms, definitions and exceptions to this statute are explained in §895.4802 of the Wisconsin Statutes.

Nothing contained herein is intended to limit any immunities and rights of any party available under Wis. Stats. §893.80, which are expressly reserves to the parties.

5.4 **Contractor Indemnification of State:** When acting as other than an agent of the Division under this Agreement, and when using the State's or Division's vehicles or equipment, the Contractor shall indemnify, defend and hold harmless the State, Division, its officers, Divisions, agents, employees, and members from all claims, suits or actions of any nature arising out of the activities or omissions of Contractor, subcontractors, its officers, agents, or employees.

6.0 Insurance Provisions

6.1 **Public Liability and Property Damage Insurance:** Contractor shall maintain, at its own expense, and keep in effect during the term of this Agreement, commercial liability, bodily injury and property damage insurance against any claim(s) which might occur in carrying out this Agreement. Minimum coverage is one million ($1,000,000) liability for bodily injury and property damage including products liability and completed operations. The State reserves the right to require higher or lower limits where warranted.

If Contractor is self-insured or uninsured, a Certificate of Protection in Lieu of an Insurance Policy shall be submitted to the Division certifying that Contractor is protected by a Self-Funded Liability and Property Program or alternative funding source(s), attached hereto as "Exhibit D". The Certificate is required to be presented prior to commencement of this Agreement.

6.2 **Automobile Liability:** Contractor shall obtain and keep in effect automobile liability insurance for all owned, non-owned and hired vehicles that are used in carrying out this Agreement. This coverage may be written in combination with the commercial liability and property damage insurance mentioned in Subsection 6.1. Minimum coverage shall be one million ($1,000.000) per occurrence combined single limit for automobile liability and property damage. The State reserves the right to require higher or lower limits where warranted.

If Contractor is self-insured or uninsured, a Certificate of Protection in Lieu of an Insurance Policy shall be submitted to the Division certifying that Contractor is protected by a Self-Funded Liability and Property Program, or alternative funding source(s) attached hereto as "Exhibit D". The Certificate is required to be presented prior to commencement of this Agreement.

6.3 **Notice of Cancellation or Change:** Contractor agrees that there shall be no cancellation, material change, exhaustion of aggregate limits or intent not to renew insurance coverage without 30 days written notice to the Division.

6.4 **Certificate(s) of Insurance:** As evidence of the insurance coverage required by this Agreement, Contractor shall provide an insurance certificate indicating this coverage, countersigned by an insurer licensed to do business in Wisconsin, covering the period of the Agreement. The insurance certificate is required to be presented prior to commencement of this Agreement.

7.0 Standard Contract Terms, Conditions and Requirements

7.1 **Disclosure of Independence and Relationship:** Contractor certifies that no relationship exists between its membership in the hazardous materials response system, the State, or the Division that interferes with fair competition or is a conflict of interest, and no relationship exists between the team and another person or organization that constitutes a conflict of interest with respect to a state contract. The Department of Administration may waive this provision, in writing, if those activities of the Contractor will not be adverse to the interest of the State.

Contractor agrees as part of this contract for services that during performance of this contract, they will neither provide contractual services nor enter into any agreement to provide services to a person or organization that is regulated or funded by the contracting agency or has interests that are adverse to the contracting agency. The Department of Administration may waive this provision, in writing, if those activities of the Contractor will not be adverse to the interests of the State.

7.2 **Dual Employment:** §16.417 of the Wisconsin Statutes, prohibits an individual who is a state employee or who is retained as a consultant full-time by a state agency from being retained as a consultant by the same or another agency where the individual receives more than $5,000 as compensation. This prohibition applies only to individuals and does not include corporations or partnerships.

7.3 **Employment:** Contractor will not engage the service of any person or persons now employed by the State, including any department, commission, or board thereof, to provide services relating to this Agreement without the written consent of the employer of such person or persons and the Department of Military Affairs

and the Division.

7.4 **Conflict of interest:** Private and non-profit corporations are bound by §180.0831 and §181.225 Wis. Stats., regarding conflicts of interest by directors in the conduct of state contracts.

7.5 **Recordkeeping and Record Retention:** The Contractor shall establish and maintain adequate records of all expenditures incurred under the Agreement. All records must be kept in accordance with generally accepted accounting principles, and be consistent with federal and state laws and local ordinances. The Division, the federal government, and their duly authorized representatives shall have the right to audit, review, examine, copy and transcribe any pertinent records or documents relating to any contract resulting from this Agreement held by Contractor. The Contractor shall retain all documents applicable to the Agreement for a period of not less than three (3) years after the final payment is made or longer where required by law.

7.6 **Team Personnel Removal:** In the event that an individual hazardous materials system member is substantiated to have been negligent or unresponsive to the contractual requirements, the Division, after consultation with Contractor and Contractor's Fire Commission/Board, may recommend the removal of this member from the hazardous material response system. A request by the Division to dismiss an employee shall not constitute an order to discipline or discharge the employee. All actions taken by the system and/or fire department management in regard to employee discipline shall be at the sole discretion of the system and/or fire department management.

7.7 **Hold Harmless:** The Division of Emergency Management, the Department of Military Affairs, and the State of Wisconsin shall be held harmless in any disputes the system and/or fire department may have with their employees. This shall include, but not be limited to, charges of discrimination, harassment, and discharge without just cause.

7.8 **Termination of Agreement:** The Division and/or Contractor may terminate this Agreement at any time **for cause** by delivering thirty (30) days written notice to the other Party. Upon termination, the Division's liability will be limited to the pro rata cost of the services performed as of the date of termination plus expenses incurred with the prior written approval of the Division. Upon termination, Contractor will refund to the Division within sixty (60) days of said termination all payments made hereunder by the Division to the Contractor for work not completed or not accepted by the Division.

Contractor may terminate this Agreement **at will** by delivering ninety (90) days written notice to the Division. In the event the Contractor terminates this Agreement for any reason whatsoever, it will refund to the Division within sixty (60)

days of said termination all payments made hereunder by the Division for its Annual Allocation, under Subsection 4.1, provided to the Contractor for the contract year in which the termination occurs based in proportion to the number of days remaining in the contract year.

The Division may terminate this Agreement **at will** effective upon delivery of written notice to the Contractor, under any of the following conditions:

(1) If Division funding from federal, state, or other sources is not obtained and/or continued at levels sufficient to allow for purchases of the indicated quantity of services, the Agreement may be modified to accommodate a reduction or increase in funds.

(2) If federal or state laws, rules, regulations, or guidelines are modified, changed, or interpreted in such a way that the services are no longer allowable or appropriate for purchase under this Agreement or are no longer eligible for the funding proposed for payments by this Agreement.

(3) If any license or certification required by law or regulation to be held by the Contractor to provide the services required by this Agreement is for any reason denied, revoked, or not renewed.

Any termination of the Agreement shall be without prejudice to any obligations or liabilities of either party already accrued prior to such termination.

7.9 **Cancellation:** The State of Wisconsin reserves that right to cancel any contract in whole or in part without penalty due to non-appropriation of funds or for failure of the Contractor to comply with the terms, conditions, and specifications of this Agreement.

7.10 **Prime Contractor and Minority Business Subcontractors:** In the event Contractor subcontracts for supplies and/or services, any subcontractor must abide by all terms and conditions of the Agreement. The Contractor shall be responsible for contract performance whether or not subcontractors are used.

Contractor is encouraged to purchase services and supplies when/if applicable from minority businesses certified by the Wisconsin Department of Development, Bureau of Minority Business Development.

Contractor shall file with the Department of Military Affairs quarterly reports of purchases of such supplies and services necessary for the implementation of this Agreement.

7.11 **Executed Contract to Constitute Entire Agreement:** The contents of the Agreement and its Exhibits, as well as additional terms agreed to, in writing, by the

Division and the Contractor shall become a part of the Agreement herein. The written Agreement with referenced Exhibits and attachments shall constitute the entire Agreement and no other terms and conditions in any document, acceptance, or acknowledgment shall be effective or binding unless expressly agreed to, in writing, by the contracting authority.

7.12 **News Releases:** News releases pertaining to the negotiation of this Agreement shall not be made without the prior approval of the Division.

7.13 **Applicable Law:** This Agreement shall be governed under the laws of the State of Wisconsin. The Contractor and State shall at all times comply with and observe all federal and state laws, local laws, ordinances and regulations which are in effect during the period of this Agreement and which may in any manner affect the work or its conduct.

7.14 **Assignment:** No right or duty, in whole or in part, of the Contractor under this Agreement may be assigned or delegated without the prior written consent of the State of Wisconsin.

7.15 **Successors in Interest:** The provisions of the Agreement shall be binding upon and shall inure to the benefit of the parties to the Agreement and their respective successors and assigns.

7.16 **Force Majeure:** Neither party to this Agreement shall be held responsible for delay or default caused by fire, riots, acts of God and/or war which is beyond that party's reasonable control.

7.17 **Notifications:** Contractor shall immediately report by telephone and in writing any demand, request, or occurrence that reasonably may give rise to a claim against the State, its officers, Divisions, agents, employees and members. Such reports shall be directed to:

ATTN: Administrator
Division of Emergency Management
WI Dept. of Military Affairs
PO Box 7865
Madison, WI 53707-7865
Telephone #: (608) 242-3232
FAX #: (608) 242-3247

Copies of such written reports shall also be sent to:

ATTN: Office of General Counsel, WING-LGL
WI Dept. of Military Affairs
PO Box 8111
Madison, WI 53708-8111

7.18 **Severability:** If any provision of this Agreement is declared by a court to be illegal or in conflict with any law, the validity of the remaining terms and provisions shall not be affected. The rights and obligations of the parties shall be construed and enforced as if the Agreement did not contain the particular provision held to be invalid.

7.19 **Amendments:** The terms of this Agreement shall not be waived, altered, modified, supplemented or amended in any manner whatsoever without prior written approval of Division and, Contractor.

7.20 **Approval Authority:** Contractor's representative(s) certify by their signature herein that he or she, as the case may be, has the necessary and lawful authority to enter into contracts and agreements on behalf of the local government entity.

7.21 **Insufficient Funds:** The obligation of the Contractor under this Agreement is contingent upon the availability and allotment of funds by the Division to Contractor and Contractor may, upon thirty (30) days prior written notice, terminate this contract if funds are not available.

7.22 **No Waiver:** No failure to exercise, and no delay in exercising, any right, power or remedy, including payment, hereunder, on the part of the Division, State, or Contractor, shall operate as a waiver hereof, nor shall any single or partial exercise of any right, power or remedy preclude any other or further exercise thereof or the exercise of any other right, power or remedy. No express waiver shall effect any event or default other than the event or default specified in such waiver, and any such waiver, to be effective, must be in writing and shall be operative only for the time and to the extent expressly provided by the Division, State, or, Contractor, therein. A waiver of any covenant, term or condition contained herein shall not be construed as a waiver of any subsequent breach of the same covenant, term or condition.

7.23 **Construction of Agreement:** This Agreement is intended to be solely between the parties hereto. No part of the Agreement shall be construed to add, supplement, amend, abridge, or repeal existing rights, benefits or privileges of any third party or parties, including but not limited to employees of either of the parties.

7.24 **Disparity:** In the event of a discrepancy, difference or disparity in the terms, conditions or language contained in the Agreement and its Exhibits, it is agreed between the parties that the language in this extended Agreement shall prevail.

Approving Signatures:

ON BEHALF OF THE DIVISION OF EMERGENCY MANAGEMENT (DIVISION)

Dated this 22nd day of June, 2017

Brian M. Satula, Division Administrator

On Behalf of the City of Chippewa Falls
A Municipal Corporation

Dated this ____ day of _____, 2017

Signature: _____
Printed Name: Gregory S. Hoffman
Title: Mayor
Address: City Hall, 30 West Central Street
City/State: Chippewa Falls, WI Zip: 54729

On Behalf of the City of Chippewa Falls

Dated this ____ day of _____, 2017

Signature: _____
Printed Name: Bridget Givens
Title: City Clerk
Address: City Hall, 30 West Central Street
City/State: Chippewa Falls, WI Zip: 54729

On Behalf of the City of Chippewa Falls

Dated this ____ day of _____, 2017

Signature: _____
Printed Name: Lynne Bauer
Title: Finance Manager/Treasurer
Address: City Hall, 30 West Central Street
City/State: Chippewa Falls, WI Zip: 54729

On Behalf of the City of Chippewa Falls Fire Department

Dated this 30th day of June, 2017

Signature: _____
Printed Name: Michael L. Hepfler
Title: Fire Chief
Address: 1301 Chippewa Crossing Blvd.
City/State: Chippewa Falls, WI Zip: 54729

Approved as to form:

Dated this ____ day of _____, 2017

Signature: _____
Printed Name: Robert A. Ferg
Title: City Attorney
Address: 411 N. Bridge Street, #201
City/State: Chippewa Falls, WI Zip: 54729-2484

EXHIBIT A

Standard Terms And Conditions (Request For Bids / Proposals)

1.0 SPECIFICATIONS: The specifications in this request are the minimum acceptable. When specific manufacturer and model numbers are used, they are to establish a design, type of construction, quality, functional capability and/or performance level desired. When alternates are bid/proposed, they must be identified by manufacturer, stock number, and such other information necessary to establish equivalency. The State of Wisconsin shall be the sole judge of equivalency. Bidders/proposers are cautioned to avoid bidding alternates to the specifications which may result in rejection of their bid/proposal.

2.0 DEVIATIONS AND EXCEPTIONS: Deviations and exceptions from original text, terms, conditions, or specifications shall be described fully, on the bidder's/proposer's letterhead, signed, and attached to the request. In the absence of such statement, the bid/proposal shall be accepted as in strict compliance with all terms, conditions, and specifications and the bidders/proposers shall be held liable.

3.0 QUALITY: Unless otherwise indicated in the request, all material shall be first quality. Items which are used, demonstrators, obsolete, seconds, or which have been discontinued are unacceptable without prior written approval by the State of Wisconsin.

4.0 QUANTITIES: The quantities shown on this request are based on estimated needs. The state reserves the right to increase or decrease quantities to meet actual needs.

5.0 DELIVERY: Deliveries shall be F.O.B. destination freight prepaid and included unless otherwise specified.

6.0 PRICING AND DISCOUNT: The State of Wisconsin qualifies for governmental discounts and its educational institutions also qualify for educational discounts. Unit prices shall reflect these discounts.

6.1 Unit prices shown on the bid/proposal or contract shall be the price per unit of sale (e.g., gal., cs., doz., ea.) as stated on the request or contract. For any given item, the quantity multiplied by the unit price shall establish the extended price, the unit price shall govern in the bid/proposal evaluation and contract administration.

6.2 Prices established in continuing agreements and term contracts may be lowered due to general market conditions, but prices shall not be subject to increase for ninety (90) calendar days from the date of award. Any increase proposed shall be submitted to the contracting agency thirty (30) calendar days before the proposed effective date of the price increase, and shall be limited to fully documented cost increases to the contractor which are demonstrated to be industrywide. The conditions under which price increases may be granted shall be expressed in bid/proposal documents and contracts or agreements.

6.3 In determination of award, discounts for early payment will only be considered when all other conditions are equal and when payment terms allow at least fifteen (15) days, providing the discount terms are deemed favorable. All payment terms must allow the option of net thirty (30).

7.0 UNFAIR SALES ACT: Prices quoted to the State of Wisconsin are not governed by the Unfair Sales Act.

8.0 ACCEPTANCE-REJECTION: The State of Wisconsin reserves the right to accept or reject any or all bids/proposals, to waive any technicality in any bid/proposal submitted, and to accept any part of a bid/proposal as deemed to be in the best interests of the State of Wisconsin.

Bids/proposals MUST be date and time stamped by the soliciting purchasing office on or before the date and time that the bid/proposal is due. Bids/proposals date and time stamped in another office will be rejected. Receipt of a bid/proposal by the mail system does not constitute receipt of a bid/proposal by the purchasing office.

9.0 METHOD OF AWARD: Award shall be made to the lowest responsible, responsive bidder unless otherwise specified.

10.0 ORDERING: Purchase orders or releases via purchasing cards shall be placed directly to the contractor by an authorized agency. No other purchase orders are authorized.

11.0 PAYMENT TERMS AND INVOICING: The State of Wisconsin normally will pay properly submitted vendor invoices within thirty (30) days of receipt providing goods and/or services have been delivered, installed (if required), and accepted as specified.

Invoices presented for payment must be submitted in accordance with instructions contained on the purchase order including reference to purchase order number and submittal to the correct address for processing.

A good faith dispute creates an exception to prompt payment.

12.0 TAXES: The State of Wisconsin and its agencies are exempt from payment of all federal tax and Wisconsin state and local taxes on its purchases except Wisconsin excise taxes as described below.

The State of Wisconsin, including all its agencies, is required to pay the Wisconsin excise or occupation tax on its purchase of beer, liquor, wine, cigarettes, tobacco products, motor vehicle fuel and general aviation fuel. However, it is exempt from payment of Wisconsin sales or use tax on its purchases. The State of Wisconsin may be subject to other states' taxes on its purchases in that state depending on the laws of that state. Contractors performing construction activities are required to pay state use tax on the cost of materials.

13.0 GUARANTEED DELIVERY: Failure of the contractor to adhere to delivery schedules as specified or to promptly replace rejected materials shall render the contractor liable for all costs in excess of the contract price when alternate procurement is necessary. Excess costs shall include the administrative costs.

14.0 ENTIRE AGREEMENT: These Standard Terms and Conditions shall apply to any contract or order awarded as a result of this request except where special requirements

are stated elsewhere in the request; in such cases, the special requirements shall apply. Further, the written contract and/or order with referenced parts and attachments shall constitute the entire agreement and no other terms and conditions in any document, acceptance, or acknowledgment shall be effective or binding unless expressly agreed to in writing by the contracting authority.

15.0 APPLICABLE LAW AND COMPLIANCE: This contract shall be governed under the laws of the State of Wisconsin. The contractor shall at all times comply with and observe all federal and state laws, local laws, ordinances, and regulations which are in effect during the period of this contract and which in any manner affect the work or its conduct. The State of Wisconsin reserves the right to cancel this contract if the contractor fails to follow the requirements of s. 77.66, Wis. Stats., and related statutes regarding certification for collection of sales and use tax. The State of Wisconsin also reserves the right to cancel this contract with any federally debarred contractor or a contractor that is presently identified on the list of parties excluded from federal procurement and non-procurement contracts.

16.0 ANTITRUST ASSIGNMENT: The contractor and the State of Wisconsin recognize that in actual economic practice, overcharges resulting from antitrust violations are in fact usually borne by the State of Wisconsin (purchaser). Therefore, the contractor hereby assigns to the State of Wisconsin any and all claims for such overcharges as to goods, materials or services purchased in connection with this contract.

17.0 ASSIGNMENT: No right or duty in whole or in part of the contractor under this contract may be assigned or delegated without the prior written consent of the State of Wisconsin.

18.0 WORK CENTER CRITERIA: A work center must be certified under s. 16.752, Wis. Stats., and must ensure that when engaged in the production of materials, supplies or equipment or the performance of contractual services, not less than seventy-five percent (75%) of the total hours of direct labor are performed by severely handicapped individuals.

19.0 NONDISCRIMINATION / AFFIRMATIVE ACTION: In connection with the performance of work under this contract, the contractor agrees not to discriminate against any employee or applicant for employment because of age, race, religion, color, handicap, sex, physical condition, developmental disability as defined in s. 51.01(5), Wis. Stats., sexual orientation as defined in s. 111.32(13m), Wis. Stats., or national origin. This provision shall include, but not be limited to, the following: employment, upgrading, demotion or transfer; recruitment or recruitment advertising; layoff or termination; rates of pay or other forms of compensation; and selection for training, including apprenticeship. Except with respect to sexual orientation, the contractor further agrees to take affirmative action to ensure equal employment opportunities.

19.1 Contracts estimated to be over twenty-five thousand dollars ($25,000) require the submission of a written affirmative action plan by the contractor. An exemption occurs from this requirement if the contractor has a workforce of less than twenty-five (25) employees. Within fifteen (15) working days after the contract is awarded, the contractor must submit the plan to the contracting state agency for approval. Instructions on preparing the plan and technical assistance regarding this clause are available from the contracting state agency.

19.2 The contractor agrees to post in conspicuous places, available for employees and applicants for employment, a notice to be provided by the contracting state agency that sets forth the provisions of the State of Wisconsin's nondiscrimination law.

19.3 Failure to comply with the conditions of this clause may result in the contractor's becoming declared an "ineligible" contractor, termination of the contract, or withholding of payment.

20.0 PATENT INFRINGEMENT: The contractor selling to the State of Wisconsin the articles described herein guarantees the articles were manufactured or produced in accordance with applicable federal labor laws. Further, that the sale or use of the articles described herein will not infringe any United States patent. The contractor covenants that it will at its own expense defend every suit which shall be brought against the State of Wisconsin (provided that such contractor is promptly notified of such suit, and all papers therein are delivered to it) for any alleged infringement of any patent by reason of the sale or use of such articles, and agrees that it will pay all costs, damages, and profits recoverable in any such suit.

21.0 SAFETY REQUIREMENTS: All materials, equipment, and supplies provided to the State of Wisconsin must comply fully with all safety requirements as set forth by the Wisconsin Administrative Code and all applicable OSHA Standards.

22.0 WARRANTY: Unless otherwise specifically stated by the bidder/proposer, equipment purchased as a result of this request shall be warranted against defects by the bidder/proposer for one (1) year from date of receipt. The equipment manufacturer's standard warranty shall apply as a minimum and must be honored by the contractor.

23.0 INSURANCE RESPONSIBILITY: The contractor performing services for the State of Wisconsin shall:

23.1 Maintain worker's compensation insurance as required by Wisconsin Statutes, for all employees engaged in the work.

23.2 Maintain commercial liability, bodily injury and property damage insurance against any claim(s) which might occur in carrying out this agreement/contract. Minimum coverage shall be one million dollars ($1,000,000) liability for bodily injury and property damage including products liability and completed operations. Provide motor vehicle insurance for all owned, non-owned and hired vehicles that are used in carrying out this contract. Minimum coverage shall be one million dollars ($1,000,000) per occurrence combined single limit for automobile liability and property damage.

23.3 The state reserves the right to require higher or lower limits where warranted.

24.0 CANCELLATION: The State of Wisconsin reserves the right to cancel any contract in whole or in part without penalty due to nonappropriation of funds or for failure of the contractor to comply with terms, conditions, and specifications of this contract.

25.0 VENDOR TAX DELINQUENCY: Vendors who have a delinquent Wisconsin tax liability may have their payments offset by the State of Wisconsin.

26.0 PUBLIC RECORDS ACCESS: It is the intention of the state to maintain an open and public process in the solicitation, submission, review, and approval of procurement activities.

Bid/proposal openings are public unless otherwise specified. Records may not be available for public inspection prior to issuance of the notice of intent to award or the award of the contract.

27.0 PROPRIETARY INFORMATION: Any restrictions on the use of data contained within a request, must be clearly stated in the bid/proposal itself. Proprietary information submitted in response to a request will be handled in accordance with applicable State of Wisconsin procurement regulations and the Wisconsin public records law. Proprietary restrictions normally are not accepted. However, when accepted, it is the vendor's responsibility to defend the determination in the event of an appeal or litigation.

27.1 Data contained in a bid/proposal, all documentation provided therein, and innovations developed as a result of the contracted commodities or services cannot be copyrighted or patented. All data, documentation, and innovations become the property of the State of Wisconsin.

27.2 Any material submitted by the vendor in response to this request that the vendor considers confidential and proprietary information and which qualifies as a trade secret, as provided in s. 19.36(5), Wis. Stats., or material which can be kept confidential under the Wisconsin public records law, must be identified on a Designation of Confidential and Proprietary Information form (DOA-3027). Bidders/proposers may request the form if it is not part of the Request for Bid/Request for Proposal package. Bid/proposal prices cannot be held confidential.

28.0 DISCLOSURE: If a state public official (s. 19.42, Wis. Stats.), a member of a state public official's immediate family, or any organization in which a state public official or a member of the official's immediate family owns or controls a ten percent (10%) interest, is a party to this agreement, and if this agreement involves payment of more than three thousand dollars ($3,000) within a twelve (12) month period, this contract is voidable by the state unless appropriate disclosure is made according to s. 19.45(6), Wis. Stats., before signing the contract. Disclosure must be made to the State of Wisconsin Ethics Board, 44 East Mifflin Street, Suite 601, Madison, Wisconsin 53703 (Telephone 608-266-8123).

State classified and former employees and certain University of Wisconsin faculty/staff are subject to separate disclosure requirements, s. 16.417, Wis. Stats.

29.0 RECYCLED MATERIALS: The State of Wisconsin is required to purchase products incorporating recycled materials whenever technically and economically feasible. Bidders are encouraged to bid products with recycled content which meet specifications.

30.0 MATERIAL SAFETY DATA SHEET: If any item(s) on an order(s) resulting from this award(s) is a hazardous chemical, as defined under 29CFR 1910.1200, provide one (1) copy of a Material Safety Data Sheet for each item with the shipped container(s) and one (1) copy with the invoice(s).

31.0 PROMOTIONAL ADVERTISING / NEWS RELEASES: Reference to or use of the State of Wisconsin, any of its departments, agencies or other subunits, or any state official or employee for commercial promotion is prohibited. News releases pertaining to this procurement shall not be made without prior approval of the State of Wisconsin. Release of broadcast e-mails pertaining to this procurement shall not be made without prior written authorization of the contracting agency.

32.0 HOLD HARMLESS: The contractor will indemnify and save harmless the State of Wisconsin and all of its officers, agents and employees from all suits, actions, or claims of any character brought for or on account of any injuries or damages received by any persons or property resulting from the operations of the contractor, or of any of its contractors, in prosecuting work under this agreement.

33.0 FOREIGN CORPORATION: A foreign corporation (any corporation other than a Wisconsin corporation) which becomes a party to this Agreement is required to conform to all the requirements of Chapter 180, Wis. Stats., relating to a foreign corporation and must possess a certificate of authority from the Wisconsin Department of Financial Institutions, unless the corporation is transacting business in interstate commerce or is otherwise exempt from the requirement of obtaining a certificate of authority. Any foreign corporation which desires to apply for a certificate of authority should contact the Department of Financial Institutions, Division of Corporation, P. O. Box 7846, Madison, WI 53707-7846; telephone (608) 261-7577.

34.0 WORK CENTER PROGRAM: The successful bidder/proposer shall agree to implement processes that allow the State agencies, including the University of Wisconsin System, to satisfy the State's obligation to purchase goods and services produced by work centers certified under the State Use Law, s.16.752, Wis. Stat. This shall result in requiring the successful bidder/proposer to include products provided by work centers in its catalog for State agencies and campuses or to block the sale of comparable items to State agencies and campuses.

35.0 FORCE MAJEURE: Neither party shall be in default by reason of any failure in performance of this Agreement in accordance with reasonable control and without fault or negligence on their part. Such causes may include, but are not restricted to, acts of nature or the public enemy, acts of the government in either its sovereign or contractual capacity, fires, floods, epidemics, quarantine restrictions, strikes, freight embargoes and unusually severe weather, but in every case the failure to perform such must be beyond the reasonable control and without the fault or negligence of the party.

EXHIBIT B

NORTHWEST WISCONSIN HAZARDOUS MATERIALS TASKFORCE
WISCONSIN HAZARDOUS MATERIALS RESPONSE SYSTEM

BUDGET

LOCAL AGENCY MEMBERS:

CITIES OF EAU CLAIRE AND CHIPPEWA FALLS, WISCONSIN
CITIES OF SUPERIOR AND ASHLAND, WISCONSIN
CITY OF RICE LAKE,WISCONSIN
CITY OF MENOMONIE, WISCONSIN

TEAM NAME	TEAM TYPE	BUDGET 7/1/17 – 6/30/18	BUDGET 7/1/18 – 6/30/19
CITIES OF EAU CLAIRE AND CHIPPEWA FALLS	TYPE I	$115,954.48	$115,954.48
CITIES OF SUPERIOR AND ASHLAND	TYPE II	$94,515.56	$94,515.56
CITY OF RICE LAKE	TYPE III	$15,823.70	$15,823.70
CITY OF MENOMONIE	TYPE III	$15,823.70	$15,823.70

NOTE: CHECKS WILL BE MADE PAYABLE TO EACH LOCAL AGENCY NOTED ABOVE ON A QUARTERLY BASIS.

EXHIBIT C
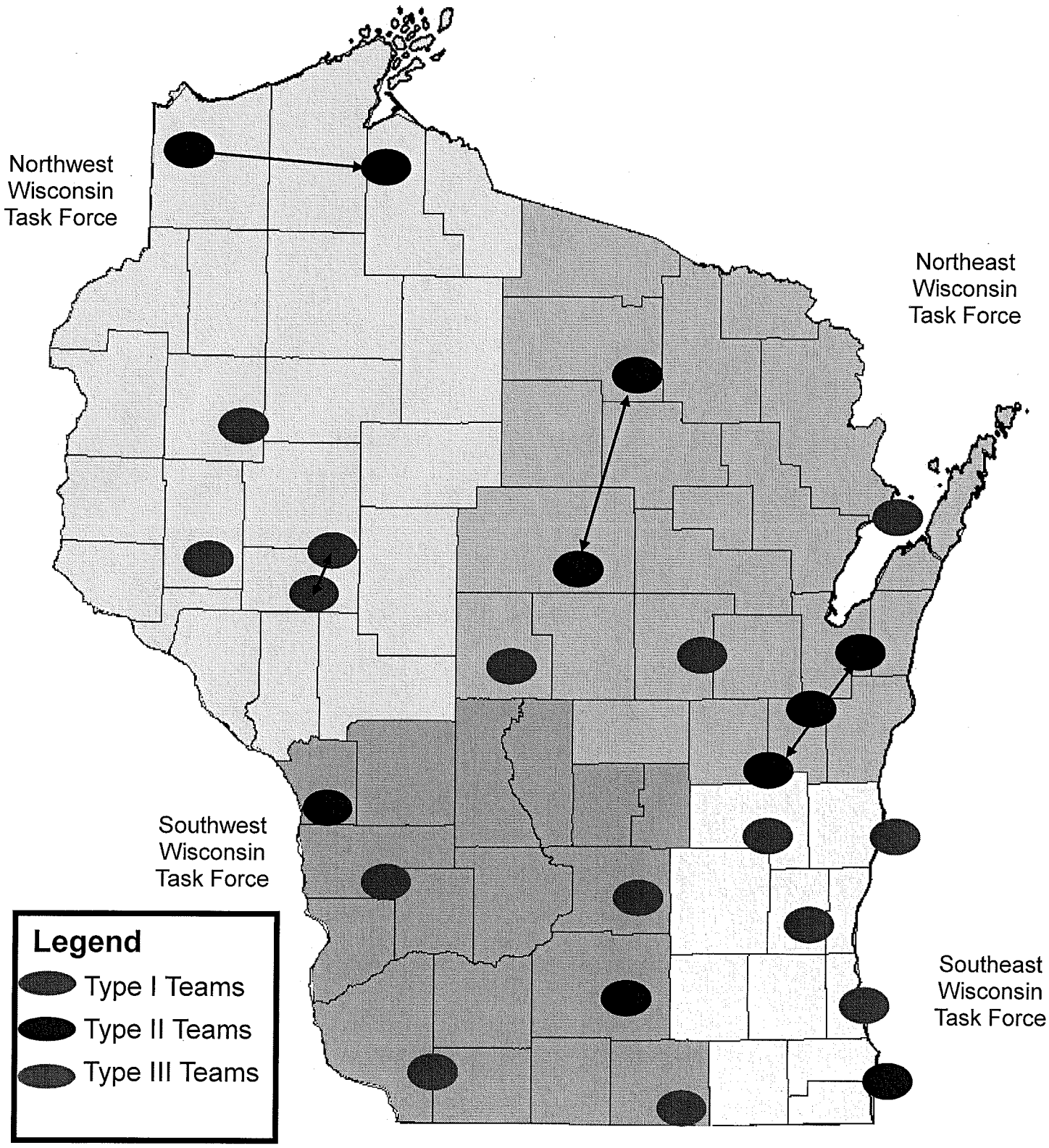
Wisconsin Hazardous Materials Response System