CITY OF CHIPPEWA FALLS, WISCONSIN

NOTICE OF PUBLIC MEETING

In accordance with the provisions of the Wisconsin State Statutes, Sec. 19.84, notice is hereby given that a public meeting of:

Committee #3
Transportation, Construction, Public Safety and Traffic

Will be held on Tuesday, March 21, 2017 at 4:45 p.m. in the City Hall Council Chambers, 30 W. Central Street, Chippewa Falls, WI

Items of business to be discussed or acted upon at this meeting are shown on the agenda below:

1. Discuss request from GK Architectural Consulting on behalf of The Church of Notre Dame for a variance from Chippewa Falls Municipal Code Chapter 19 relative to required sign set-backs. Possible recommendations to Council.

2. Discuss Police Department proposal to add a K9 Unit. Possible recommendations to Council.

3. Discuss parking/traffic concerns in the neighborhood areas adjacent to Leinenkugel's Brewery. Possible recommendations to Council.

4. Adjournment

NOTICE IS HEREBY GIVEN THAT A MAJORITY OF THE CITY COUNCIL MAY BE PRESENT AT THIS MEETING TO GATHER INFORMATION ABOUT A SUBJECT OVER WHICH THEY HAVE DECISION MAKING RESPONSIBILITY.
NOTE: REASONABLE ACCOMMODATIONS FOR PARTICIPATION BY INDIVIDUALS WITH DISABILITIES WILL BE MADE UPON REQUEST. FOR ADDITIONAL INFORMATION OR TO REQUEST THIS SERVICE, CONTACT THE CITY CLERK AT 726-2719.

Please note that attachments to this agenda may not be final and are subject to change. This agenda may be amended as it is reviewed.

CERTIFICATION OF OFFICIAL NEWSPAPER
I hereby certify that a copy of this notice has been posted on the City Hall bulletin board and a copy has been given to the Chippewa Herald on March 17, 2017 at 1:45 pm by BNG.

gk architectural consulting

March 9, 2017

Building Permits & Inspection Department
City of Chippewa Falls
30 West Central St.
Chippewa Falls, WI 54729

REQUEST FOR SIGN VARIANCE

On behalf of the Owner, The Church of Notre Dame, a variance is requested for a proposed new ground sign. The proposed sign would be located approximately 9 feet from the property line, which is closer to the property line than allowed by the city ordinance. This location is about 2.5 feet closer to the property line than the existing sign. Plans are included to show the location and construction of the proposed new sign.

If you have any questions, please contact me at 715-505-2718 or email at gkucko@charter.net.

GK ARCHITECTURAL CONSULTING

Gary Kučko, AIA

3613 Tamarack Lane, Eau Claire, WI 54701 | 715.505.2718 | gkucko@charter.net

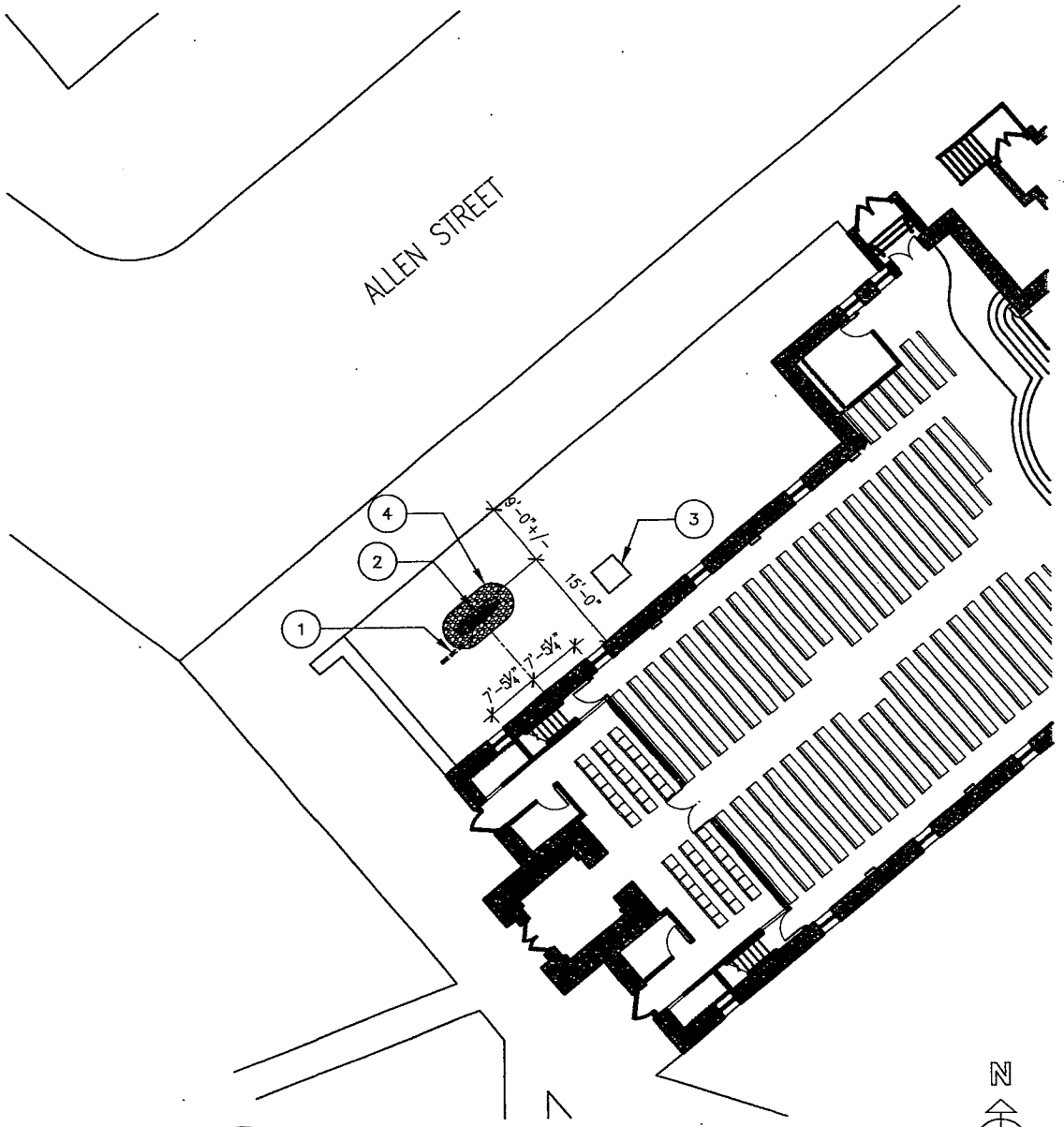

1 SITE PLAN

0 8' 16' 32'

SHEET INDEX:

A1 SITE PLAN, CONSTRUCTION NOTES, BIDDING AND SPECIFICATION NOTES

A2 SLAB ELEVATION, FOUNDATION PLAN, ABOVE GRADE PLAN, SIGN ELEVATION, LETTERING FOR BOX SIGN, ARCH SECTION @ STAINED GLASS

S1 STRUCTURAL DETAILS

CONSTRUCTION NOTES:

1. EXISTING SIGN TO BE REMOVED BY EXCAVATION CONTRACTOR.
2. NEW EXTERIOR SIGN.
3. EXISTING MASONRY STATUE BASE TO BE TUCK POINTED BY MASONRY CONTRACTOR.
4. 2'-0" PERIMETER OF 3/4" ROCK MULCH WITH EDGING.

BIDDING AND SPECIFICATION NOTES:

1 CONTRACTORS ARE AS LISTED BELOW:

ELECTRICAL:	ROSHELL ELECTRIC, INC.
EXCAVATION:	WAYNE'S WALLS
MASONRY:	SLOWIAK MASONRY & CONCRETE, LLC
PRECAST CONC:	HUFFCUTT CONCRETE, INC
SIGNAGE:	IMAGE 360

2 BIDS/PROPOSALS SHALL BE SUBMITTED ON CONTRACTORS STANDARD BID/PROPOSAL FORM TO THE ARCHITECT (EMAIL: gkucko@charter.net) IN PDF FORMAT BY 5:00 PM ON TUESDAY, MARCH 14, 2017. ANY QUESTIONS SHALL BE DIRECTED TO THE ARCHITECT PRIOR TO THAT TIME.

3 ELECTRICAL CONTRACTOR SHALL DISCONNECT EXISTING ELECTRICAL SERVICE TO THE EXISTING SIGN, PROVIDE NEW ELECTRICAL SERVICE TO THE LOCATION OF THE NEW SIGN, AND DIRECT/INSTALL ELECTRICAL BOXES/CONDUIT IN PRECAST CONCRETE SLAB SUB-STRUCTURE, AS REQUIRED FOR POWER FOR LIGHTING.

4 EXCAVATION CONTRACTOR SHALL BE RESPONSIBLE FOR THE EXCAVATION FOR THE NEW SIGN, FORMING & POURING THE CONCRETE FOOTING, BACKFILLING, PROVIDING THE EDGING AND 3/4" ROCK MULCH, AND RESTORING THE AREA DISTURBED BY CONSTRUCTION TO INCLUDE FINAL GRADING AND SEEDING.

5 MASONRY CONTRACTOR SHALL DETERMINE THE AMOUNT OF STONE VENEER REQUIRED FOR THE PROJECT TO BE PURCHASED BY THE OWNER. STONE VENEER SPECIFICATIONS: NATURAL THIN VENEER STONE MANUFACTURER SHALL BE: NATURAL STONE VENEERS INTERNATIONAL, INC., PO BOX 347, FOND DU LAC, WISCONSIN 54936. TOLL FREE (877) 923-2800. PHONE (920) 923-2800. FAX (920) 923-3800. WEBSITE WWW.NSVI.COM. PRODUCT SHALL BE: TUSCAN COLLECTION, SYDNEY OVERGROUT PATTERN. MASONRY CONTRACTOR SHALL INSTALL THE STONE VENEER ACCORDING TO THE MANUFACTURER'S INSTALLATION INSTRUCTIONS. MASONRY CONTRACTOR SHALL ALSO HAVE A CREW ON SITE TO HELP PLACE AND WELD THE PRECAST CONCRETE SLAB TO THE WELD PLATES IN THE CONCRETE FOOTING.

6 PRECAST CONCRETE CONTRACTOR SHALL BE RESPONSIBLE FOR FABRICATION, INCLUDING ALLOWING THE ELECTRICAL CONTRACTOR TO DIRECT/INSTALL ELECTRICAL BOXES/CONDUIT IN THE PRECAST CONCRETE SLAB, DELIVERY OF THE PRECAST CONCRETE SLAB TO THE SITE, AND INSTALLATION AS ASSISTED BY THE MASONRY CONTRACTOR.

7 SIGN CONTRACTOR SHALL BE RESPONSIBLE FOR THE FABRICATION AND INSTALLATION OF THE SIGN. SIGN SPECIFICATIONS: BOX SIGN SHALL BE INTERNALLY ILLUMINATED (LED) WITH A TRANSLUCENT WHITE POLYCARBONATE FACE AND APPLIED VINYL OVERLY (COLORS AS SHOWN) AND PRINTED LETTERS MOUNTED INTO CONCRETE/STONE STRUCTURE. EXISTING STAINED GLASS WINDOW SHALL BE REPURPOSED INTO THE SIGN AND INTERNALLY ILLUMINATED (LED) AND PROTECTED BACK AND FRONT WITH CLEAR POLYCARBONATE FACES. RETAINERS, T-BAR, AND RETURNS SHALL BE BLACK. "THE CHURCH OF NOTRE DAME" LETTERING SHALL MATCH THE FONT ON THE CHURCH'S LETTERHEAD.

gk architectural consulting
3813 TAMARACK LANE, EAU CLAIRE, WI 54701
PHONE: 715.832.7175 CELL: 715.505.2718

EXTERIOR SIGN FOR
THE CHURCH OF NOTRE DAME
CHIPPEWA FALLS, WISCONSIN

PROJECT NO. NDCC-003
ISSUE DATE 03/08/17
DESIGNED BY
DRAWN BY
PROJECT MGR

SHEET CONTENTS
SITE PLAN
CONSTRUCTION NOTES
BIDDING AND SPECIFICATION NOTES

A1

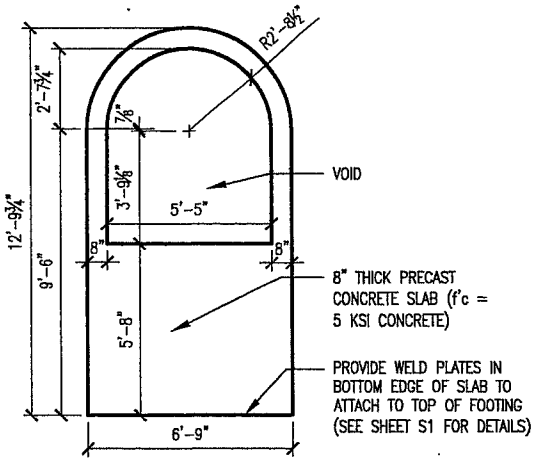

1 SLAB ELEVATION

0 2' 4' 8'

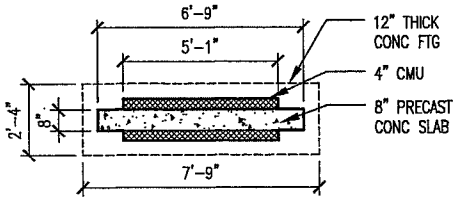

2 FOUNDATION PLAN

0 2' 4' 8'

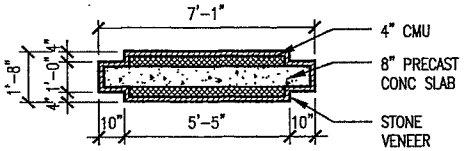

3 ABOVE GRADE PLAN

0 2' 4' 8'

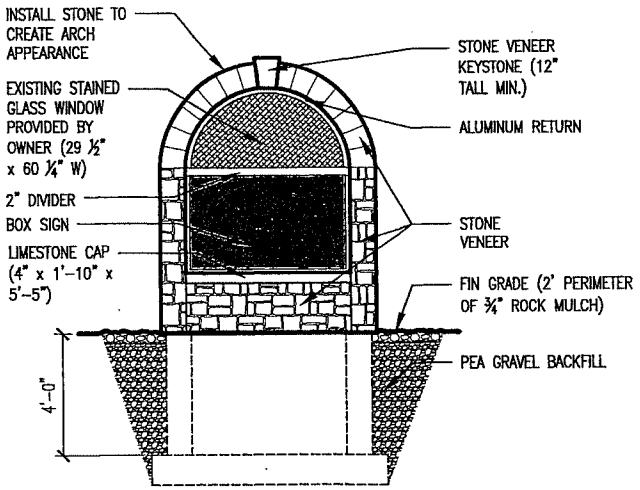

4 SIGN ELEVATION

0 2' 4' 8'

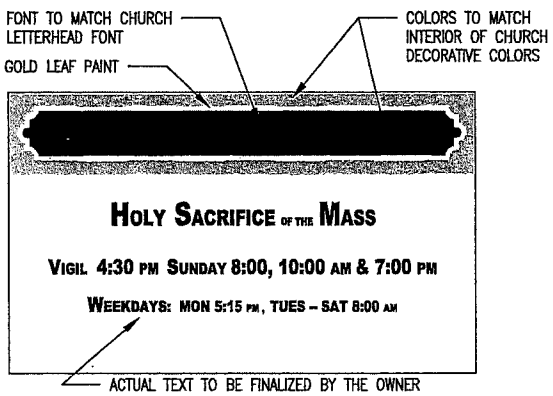

5 LETTERING FOR BOX SIGN

0 8" 1'-4" 2'-8"

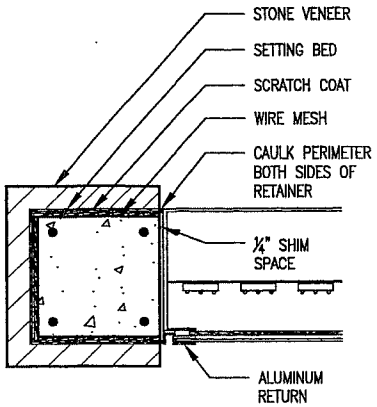

6 ARCH SECTION @ STAINED GLASS

0 4" 8" 1'-4"

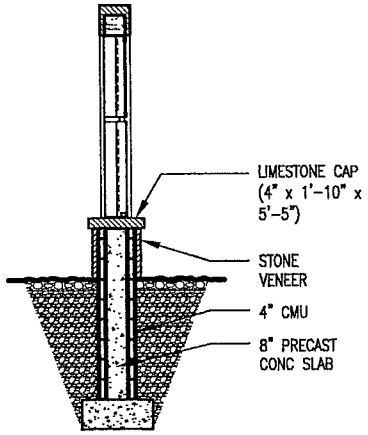

7 SIGN CROSS SECTION

0 2' 4' 8'

gk architectural consulting
3613 TAMARACK LANE, EAU CLAIRE, WI 54701
PHONE: 715.832.7175 CELL: 715.605.2718

EXTERIOR SIGN FOR
THE CHURCH OF NOTRE DAME
CHIPPEWA FALLS, WISCONSIN

PROJECT NO. NDCC-003
ISSUE DATE 03/03/17
DESIGNED BY
DRAWN BY
PROJECT MGR

SHEET CONTENTS
SLAB ELEVATION
FOUNDATION PLAN
ABOVE GRADE PLAN
SIGN ELEVATION
LETTERING FOR BOX SIGN
ARCH SECTION @ STAINED GLASS

A2

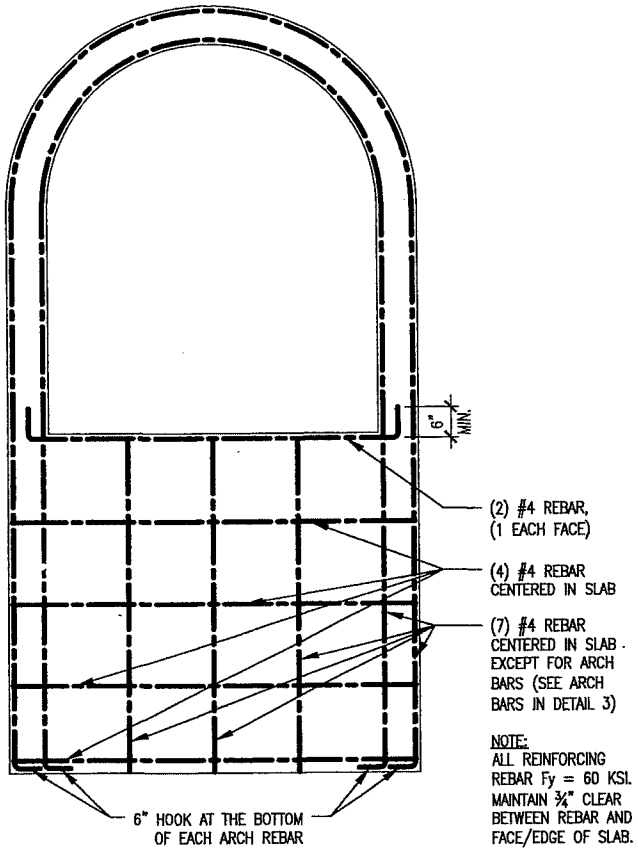

1 PRECAST CONC SLAB REINFORCING

0 1' 2' 4'

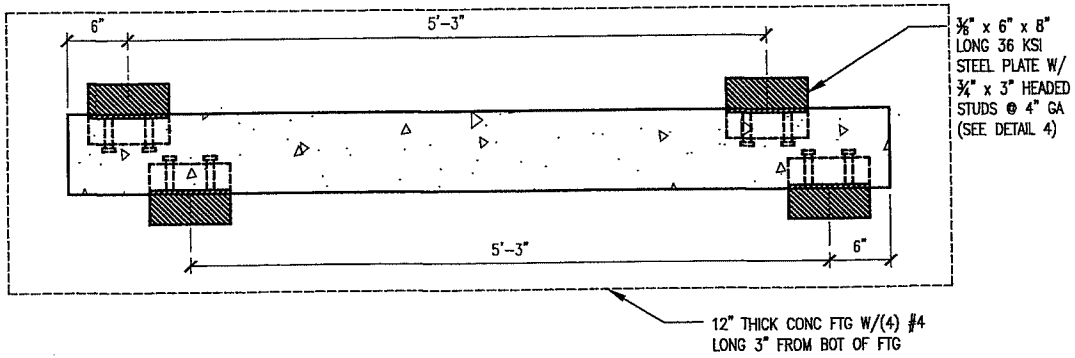

2 FOOTING REINFORCING AND WELD PLATE LOCATIONS

0 6" 1' 2'

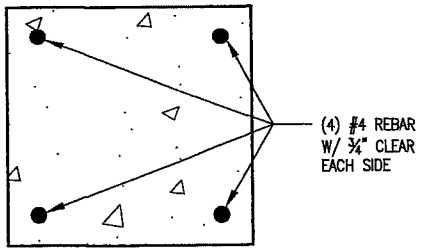

3 ARCH REINFORCING

0 2" 4" 8"

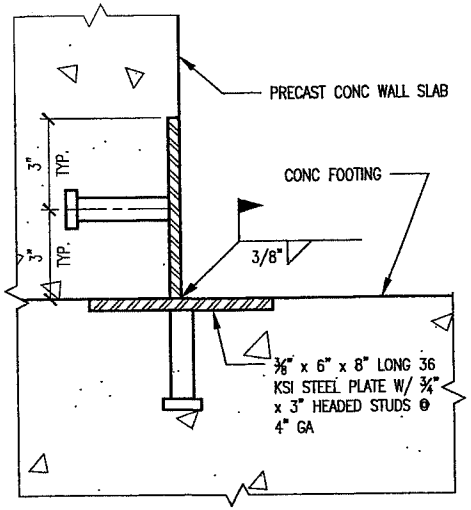

4 WELD PLATE CONNECTION

0 2" 4" 8"

gk architectural consulting
3613 TAMARACK LANE, EAU CLAIRE, WI 54701
PHONE: 715.832.7175 CELL: 715.505.2718

EXTERIOR SIGN FOR
THE CHURCH OF NOTRE DAME
CHIPPEWA FALLS, WISCONSIN

PROJECT NO. NDCC-003
ISSUE DATE 03/06/17
DESIGNED BY
DRAWN BY
PROJECT MGR

SHEET CONTENTS
PRECAST CONC SLAB REINFORCING
FOOTING REINFORCING AND WELD PLATE LOCATIONS
ARCH REINFORCING
WELD PLATE CONNECTION

S1r

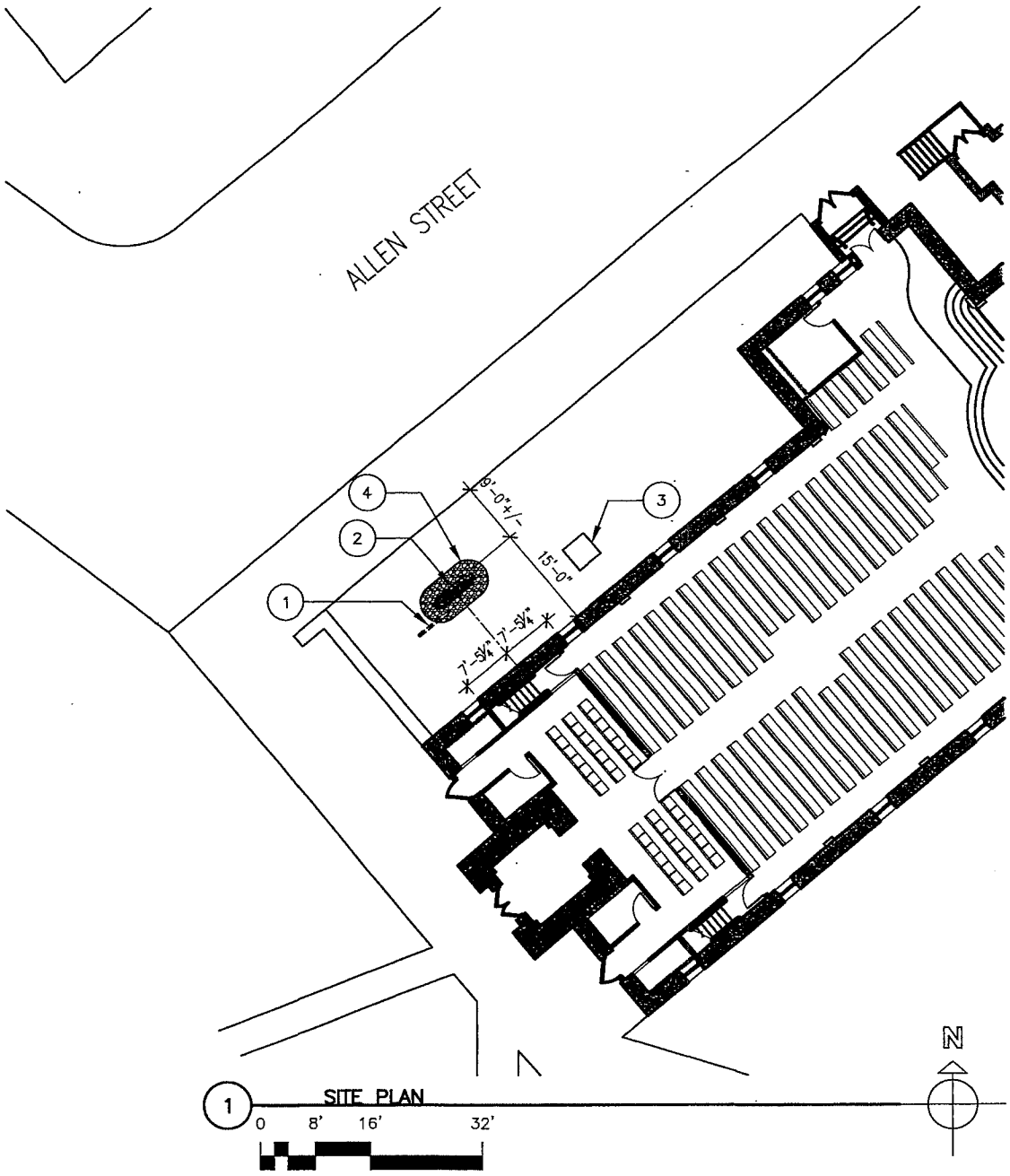

SHEET INDEX:

A1 SITE PLAN, CONSTRUCTION NOTES, BIDDING AND SPECIFICATION NOTES

A2 SLAB ELEVATION, FOUNDATION PLAN, ABOVE GRADE PLAN, SIGN ELEVATION, LETTERING FOR BOX SIGN, ARCH SECTION @ STAINED GLASS

S1 STRUCTURAL DETAILS

CONSTRUCTION NOTES:

1. EXISTING SIGN TO BE REMOVED BY EXCAVATION CONTRACTOR.
2. NEW EXTERIOR SIGN.
3. EXISTING MASONRY STATUE BASE TO BE TUCK POINTED BY MASONRY CONTRACTOR.
4. 2'-0" PERIMETER OF 3/4" ROCK MULCH WITH EDGING.

BIDDING AND SPECIFICATION NOTES:

1 CONTRACTORS ARE AS LISTED BELOW:

ELECTRICAL:	ROSHELL ELECTRIC, INC.
EXCAVATION:	WAYNE'S WALLS
MASONRY:	SLOWIAK MASONRY & CONCRETE, LLC
PRECAST CONC:	HUFFCUTT CONCRETE, INC
SIGNAGE:	IMAGE 360

2 BIDS/PROPOSALS SHALL BE SUBMITTED ON CONTRACTORS STANDARD BID/PROPOSAL FORM TO THE ARCHITECT (EMAIL: gkucko@charter.net) IN PDF FORMAT BY 5:00 PM ON TUESDAY, MARCH 14, 2017. ANY QUESTIONS SHALL BE DIRECTED TO THE ARCHITECT PRIOR TO THAT TIME.

3 ELECTRICAL CONTRACTOR SHALL DISCONNECT EXISTING ELECTRICAL SERVICE TO THE EXISTING SIGN, PROVIDE NEW ELECTRICAL SERVICE TO THE LOCATION OF THE NEW SIGN, AND DIRECT/INSTALL ELECTRICAL BOXES/CONDUIT IN PRECAST CONCRETE SLAB SUB-STRUCTURE, AS REQUIRED FOR POWER FOR LIGHTING.

4 EXCAVATION CONTRACTOR SHALL BE RESPONSIBLE FOR THE EXCAVATION FOR THE NEW SIGN, FORMING & POURING THE CONCRETE FOOTING, BACKFILLING, PROVIDING THE EDGING AND 3/4" ROCK MULCH, AND RESTORING THE AREA DISTURBED BY CONSTRUCTION TO INCLUDE FINAL GRADING AND SEEDING.

5 MASONRY CONTRACTOR SHALL DETERMINE THE AMOUNT OF STONE VENEER REQUIRED FOR THE PROJECT TO BE PURCHASED BY THE OWNER. STONE VENEER SPECIFICATIONS: NATURAL THIN VENEER STONE MANUFACTURER SHALL BE: NATURAL STONE VENEERS INTERNATIONAL, INC., PO BOX 347, FOND DU LAC, WISCONSIN 54936. TOLL FREE (877) 923-2800. PHONE (920) 923-2800. FAX (920) 923-3800. WEBSITE WWW.NSVI.COM. PRODUCT SHALL BE: TUSCAN COLLECTION, SYDNEY OVERGROUT PATTERN. MASONRY CONTRACTOR SHALL INSTALL THE STONE VENEER ACCORDING TO THE MANUFACTURER'S INSTALLATION INSTRUCTIONS. MASONRY CONTRACTOR SHALL ALSO HAVE A CREW ON SITE TO HELP PLACE AND WELD THE PRECAST CONCRETE SLAB TO THE WELD PLATES IN THE CONCRETE FOOTING.

6 PRECAST CONCRETE CONTRACTOR SHALL BE RESPONSIBLE FOR FABRICATION, INCLUDING ALLOWING THE ELECTRICAL CONTRACTOR TO DIRECT/INSTALL ELECTRICAL BOXES/CONDUIT IN THE PRECAST CONCRETE SLAB, DELIVERY OF THE PRECAST CONCRETE SLAB TO THE SITE, AND INSTALLATION AS ASSISTED BY THE MASONRY CONTRACTOR.

7 SIGN CONTRACTOR SHALL BE RESPONSIBLE FOR THE FABRICATION AND INSTALLATION OF THE SIGN. SIGN SPECIFICATIONS: BOX SIGN SHALL BE INTERNALLY ILLUMINATED (LED) WITH A TRANSLUCENT WHITE POLYCARBONATE FACE AND APPLIED VINYL OVERLY (COLORS AS SHOWN) AND PRINTED LETTERS MOUNTED INTO CONCRETE/STONE STRUCTURE. EXISTING STAINED GLASS WINDOW SHALL BE REPURPOSED INTO THE SIGN AND INTERNALLY ILLUMINATED (LED) AND PROTECTED BACK AND FRONT WITH CLEAR POLYCARBONATE FACES. RETAINERS, T-BAR, AND RETURNS SHALL BE BLACK. "THE CHURCH OF NOTRE DAME" LETTERING SHALL MATCH THE FONT ON THE CHURCH'S LETTERHEAD.

gk architectural consulting
3613 TAMARACK LANE, EAU CLAIRE, WI. 54701
PHONE: 715.832.7175 CELL: 715.505.2718

EXTERIOR SIGN FOR
THE CHURCH OF NOTRE DAME
CHIPPEWA FALLS, WISCONSIN

PROJECT NO. NDCO-003
ISSUE DATE 03/08/17
DESIGNED BY
DRAWN BY
PROJECT MGR

SHEET CONTENTS
SITE PLAN
CONSTRUCTION NOTES
BIDDING AND SPECIFICATION NOTES

A1

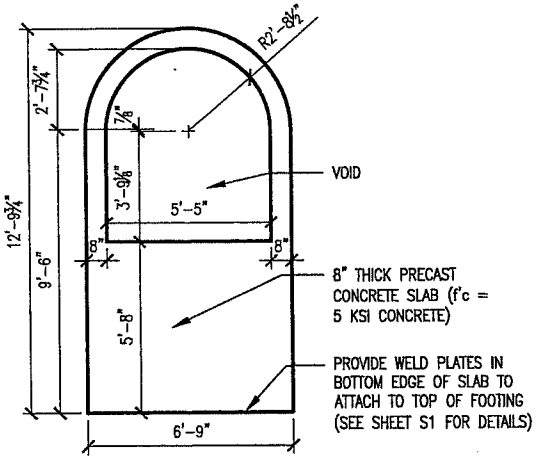

1 SLAB ELEVATION

0 2' 4' 8'

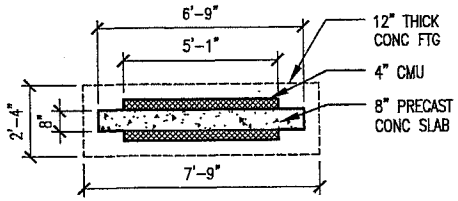

2 FOUNDATION PLAN

0 2' 4' 8'

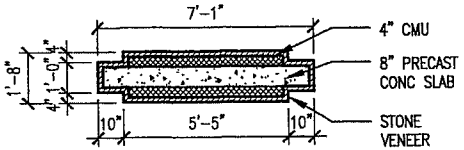

3 ABOVE GRADE PLAN

0 2' 4' 8'

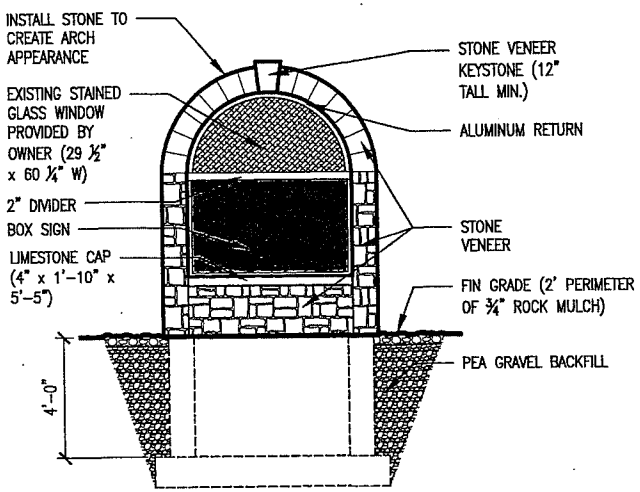

4 SIGN ELEVATION

0 2' 4' 8'

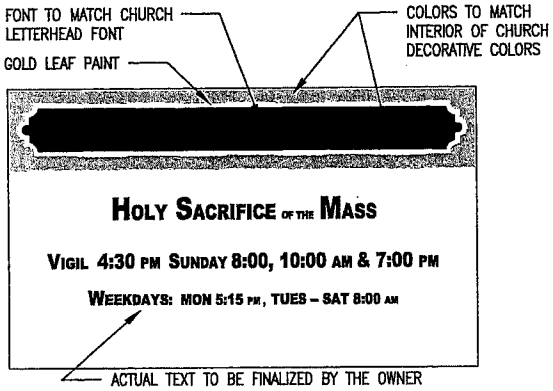

5 LETTERING FOR BOX SIGN

0 8" 1'-4" 2'-8"

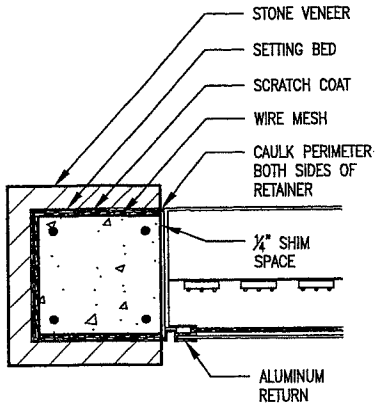

6 ARCH SECTION @ STAINED GLASS

0 4" 8" 1'-4"

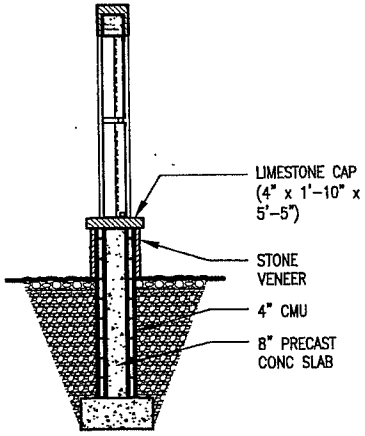

7 SIGN CROSS SECTION

0 2' 4' 8'

gk architectural consulting
3613 TAMARACK LANE, EAU CLAIRE, WI 54701
PHONE: 715.832.7175 CELL: 715.505.2718

EXTERIOR SIGN FOR
THE CHURCH OF NOTRE DAME
CHIPPEWA FALLS, WISCONSIN

PROJECT NO. NDCC-003
ISSUE DATE 03/03/17
DESIGNED BY
DRAWN BY
PROJECT MGR

SHEET CONTENTS
SLAB ELEVATION
FOUNDATION PLAN
ABOVE GRADE PLAN
SIGN ELEVATION
LETTERING FOR BOX SIGN
ARCH SECTION @ STAINED GLASS

A2

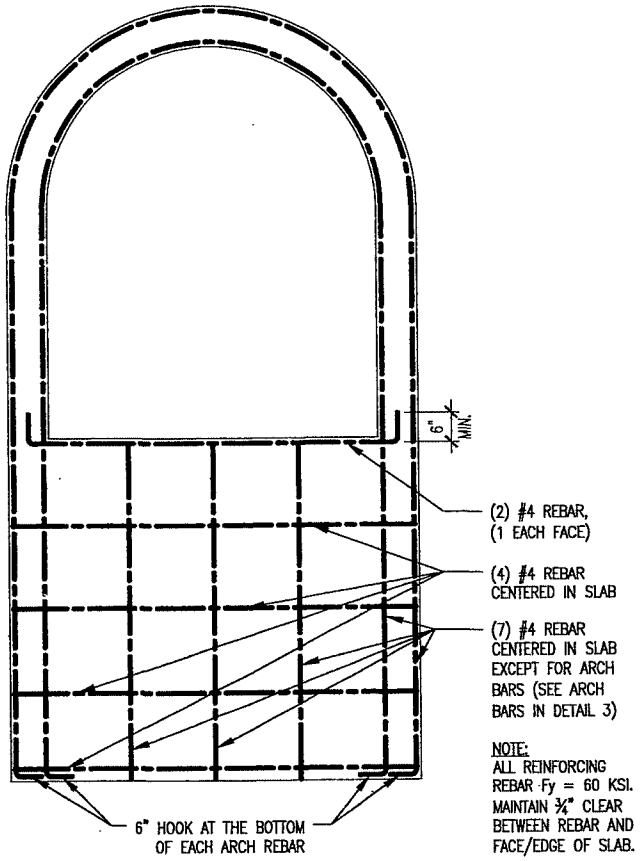

1 PRECAST CONC SLAB REINFORCING

0 1' 2' 4'

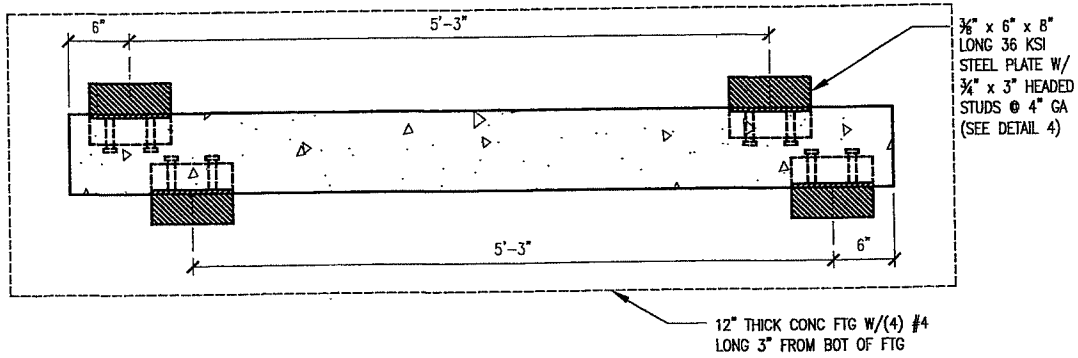

2 FOOTING REINFORCING AND WELD PLATE LOCATIONS

0 6" 1' 2'

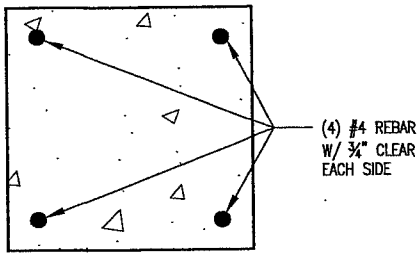

3 ARCH REINFORCING

0 2" 4" 8"

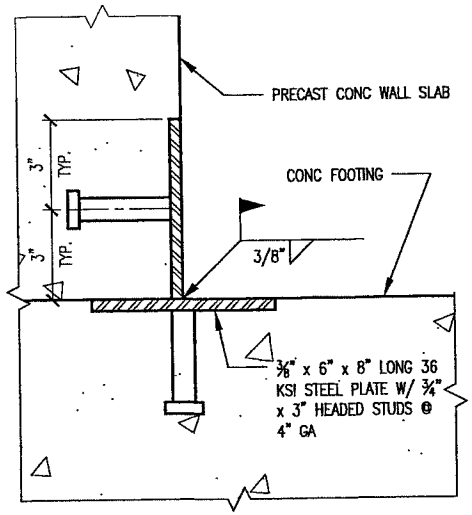

4 WELD PLATE CONNECTION

0 2" 4" 8"

gk architectural consulting
3813 TAMARACK LANE, EAU CLAIRE, WI 54701
PHONE: 715.832.7175 CELL: 715.505.2718

EXTERIOR SIGN FOR
THE CHURCH OF NOTRE DAME
CHIPPEWA FALLS, WISCONSIN

PROJECT NO. NDCC-003
ISSUE DATE 03/08/17
DESIGNED BY
DRAWN BY
PROJECT MGR

SHEET CONTENTS
PRECAST CONC SLAB REINFORCING
FOOTING REINFORCING AND WELD PLATE LOCATIONS
ARCH REINFORCING
WELD PLATE CONNECTION

S1r